shernbao®

Installation and Use Instructions for Stainless Steel Bathing Tub

BTS-130N



Schematic diagram of accessories

1 Shaped ring*3

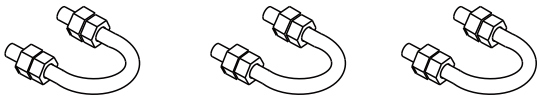

6 Booster & Grate for Bathing Tubs

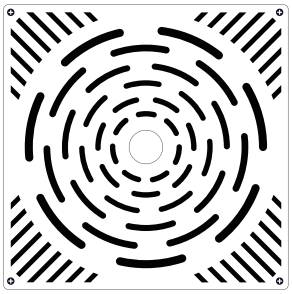

2 Drain Suite

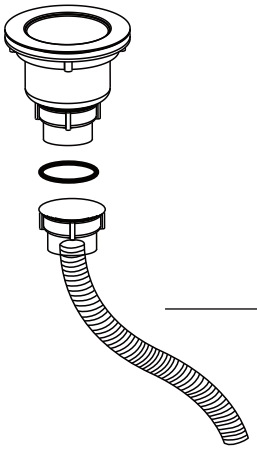

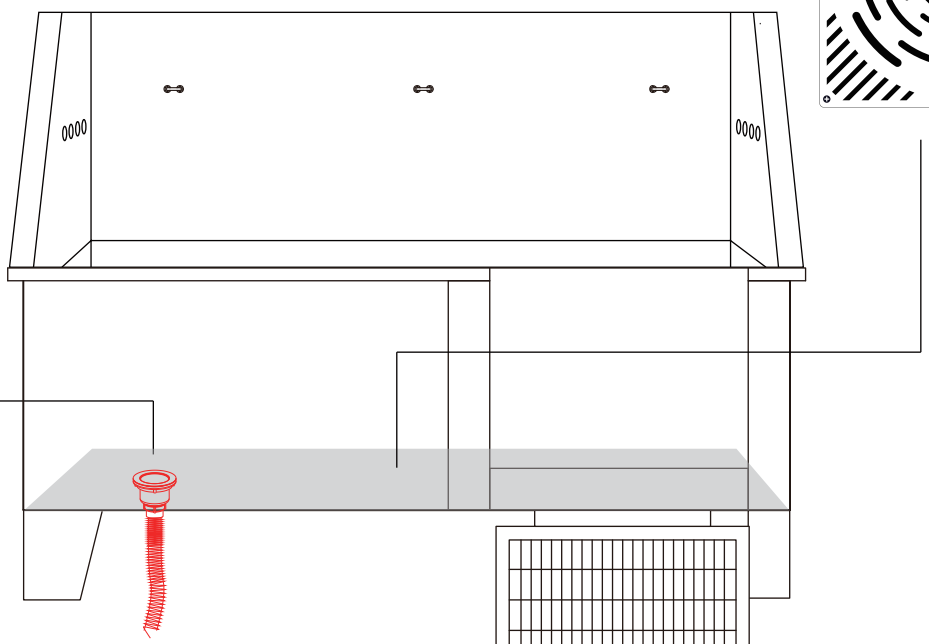

3 (M10 * 25 screws, spring washers, nuts,flat washers) * 8 sets



5 130N exclusive base

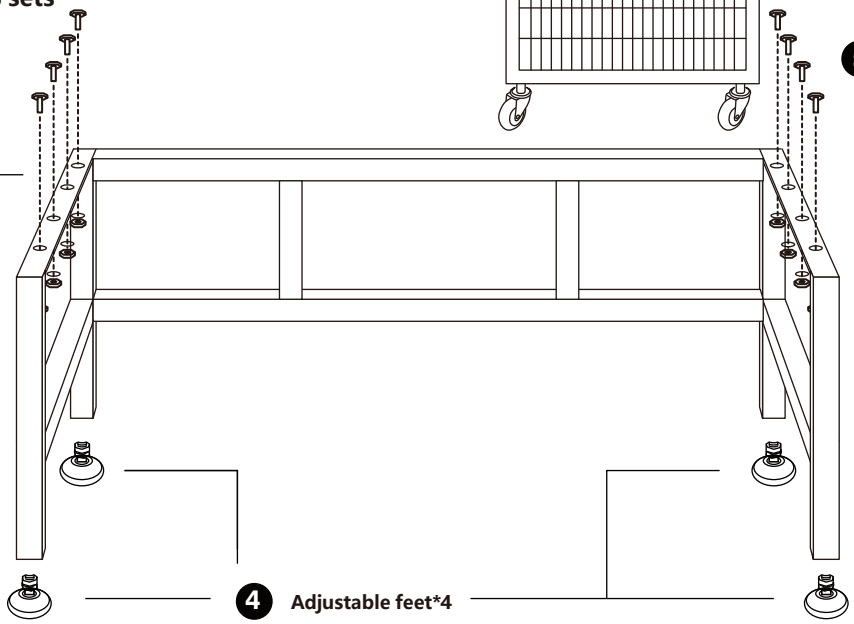

4 Adjustable feet*4

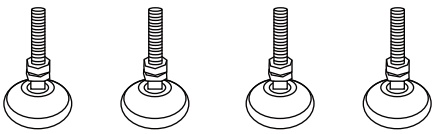

BTS-130N

Accessories

List	Model No.	Spare Parts Name	QTY
1	BTS-001	Shaped ring	3
2	BTS-T002	Drain Suite	1
3	BTS-T011	M10 * 25 screws,spring washers, nuts,flat washers	8
4	BTS-T005	Adjustable feet	4
5	BTS-131N-01	BTS-130N exclusive base	1
6	BTS-T012	Booster & Grate for Bathing Tubs	1
7	BTS-T007	Scouring pad	1

The following accessories need to be installed by oneself

❶

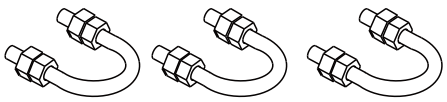

Shaped ring*3

❷



Rubber seal*1

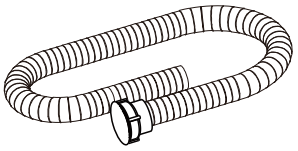

Hose*1

❸

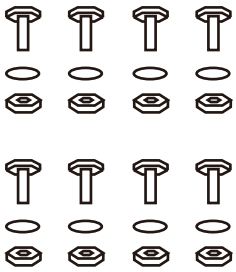

M10 * 25 screws, spring washers, nuts,flat washers

❺

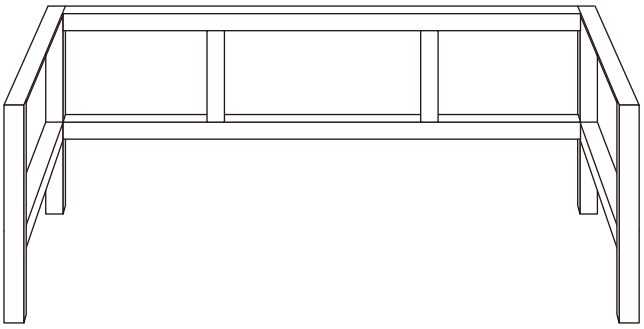

BTS-130N exclusive base

After receiving the product, please first check if the packaging is severely damaged.Open the packaging and check if the accessories are complete.If there are any quality issues with the product.

Installation instructions

The installation of the bathing tub is shown in the following figure

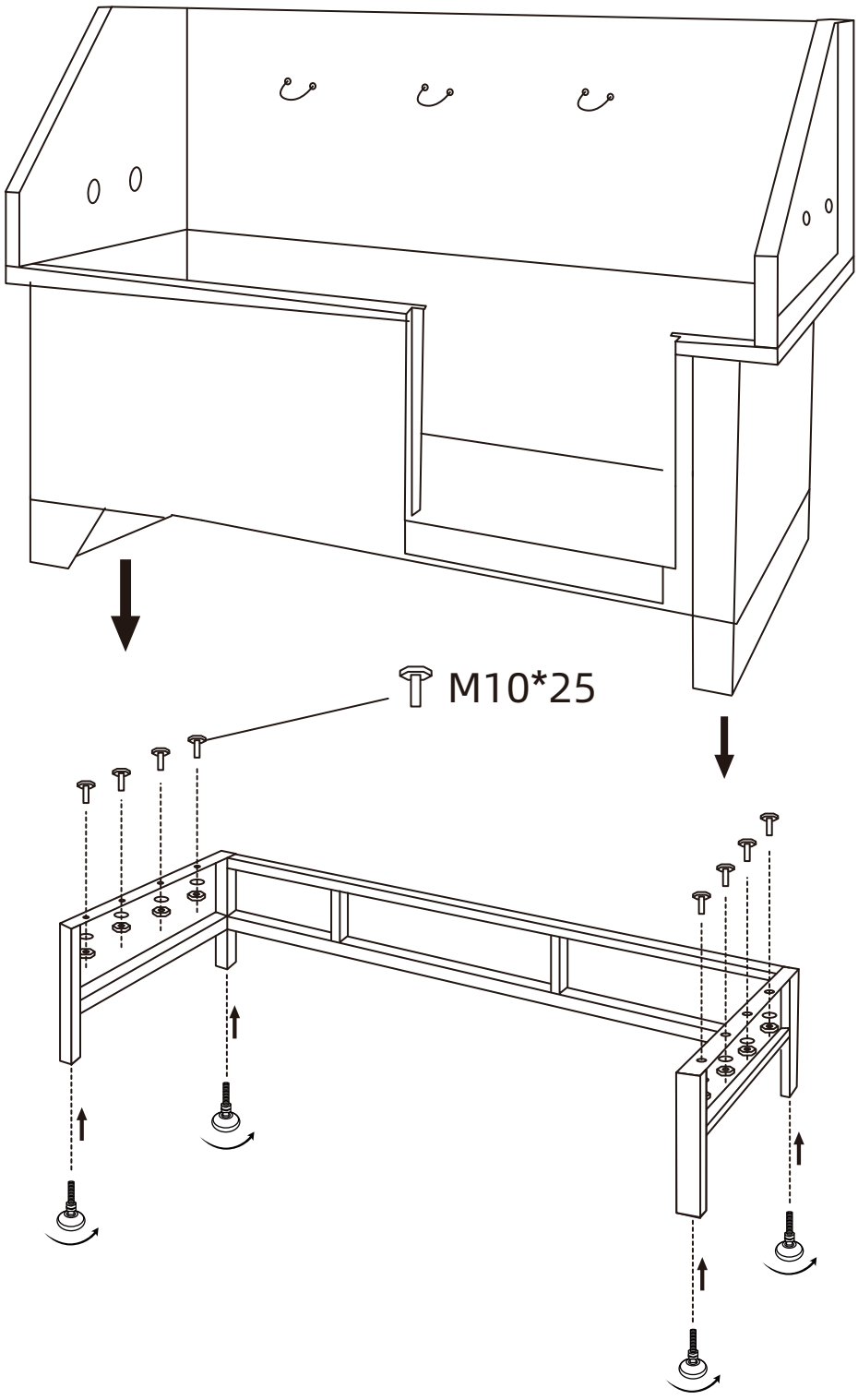

BTS-130N

Installation instructions

The installation of the hook on the back panel of the tank is shown in the following figure

Pass the hooks through tub backplate and tighten up the screws on the back.

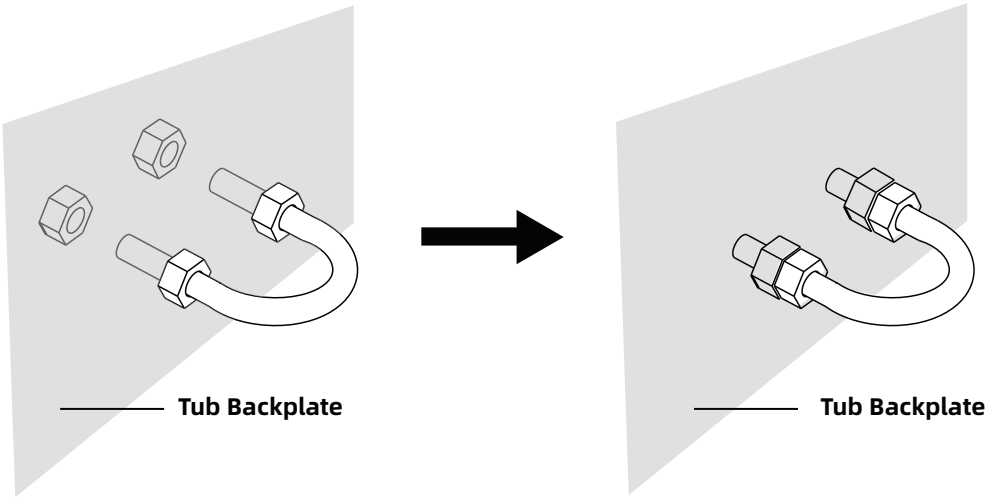

The installation of drain as shown on the right:

① Remove the cap from the drain and put it through the reserved hole on the tub.
② Put the cap back to the drain from the bottom of tub and tighten it clockwise.
③ Put the rubber seal on the hose connector and turn it into the drain and tighten it.

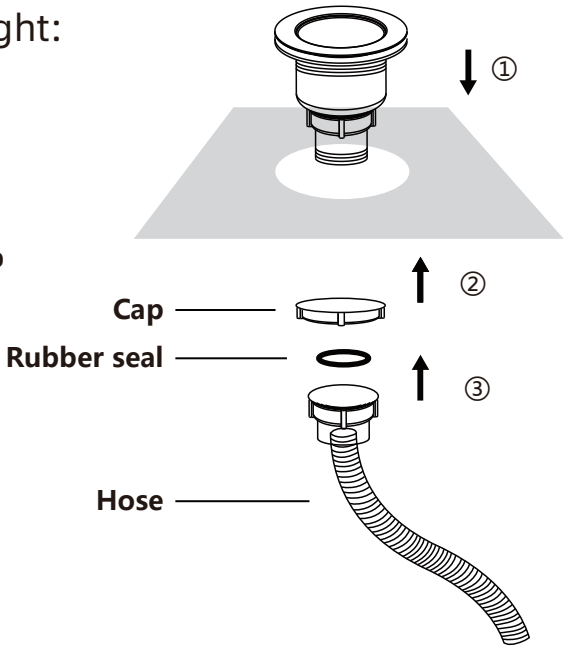

Parameter

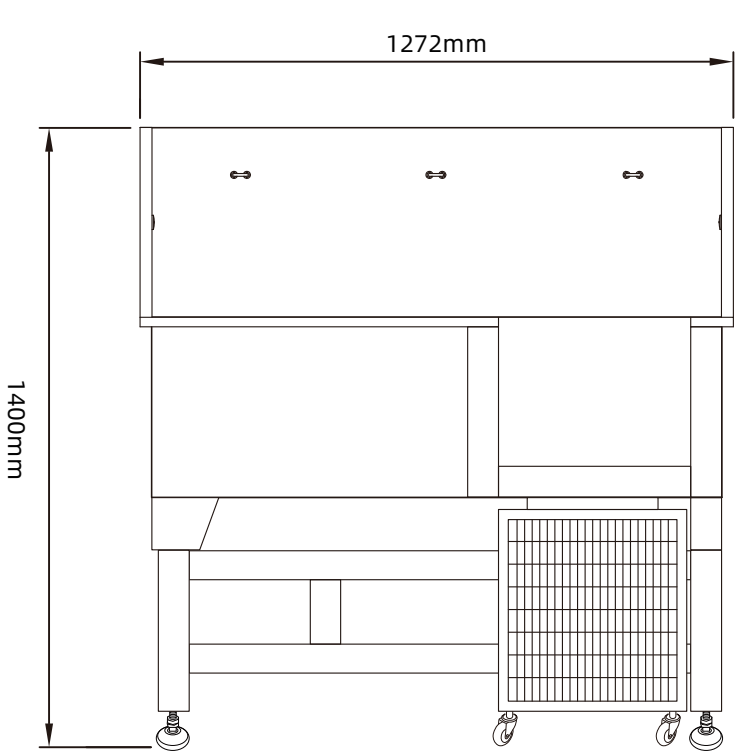

Front view

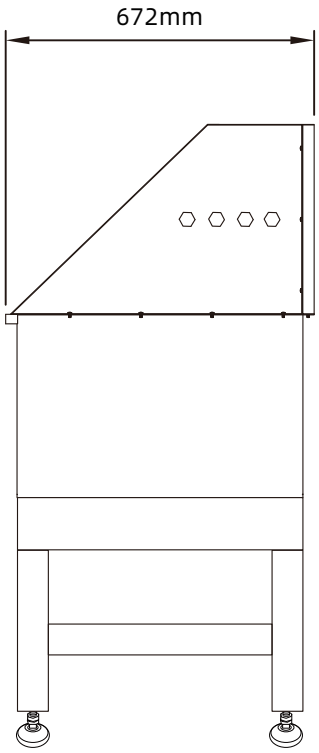

Side view

Type: BTS-130N			
Net weight(kg)	110	Grass weight(kg)	145
Product dimensions (cm)	127×67×140	Package dimensions (cm)	141×78×70H
Hose type		Four split water pipe interface	

Dimensional Diagram

Plan view of tub bottom

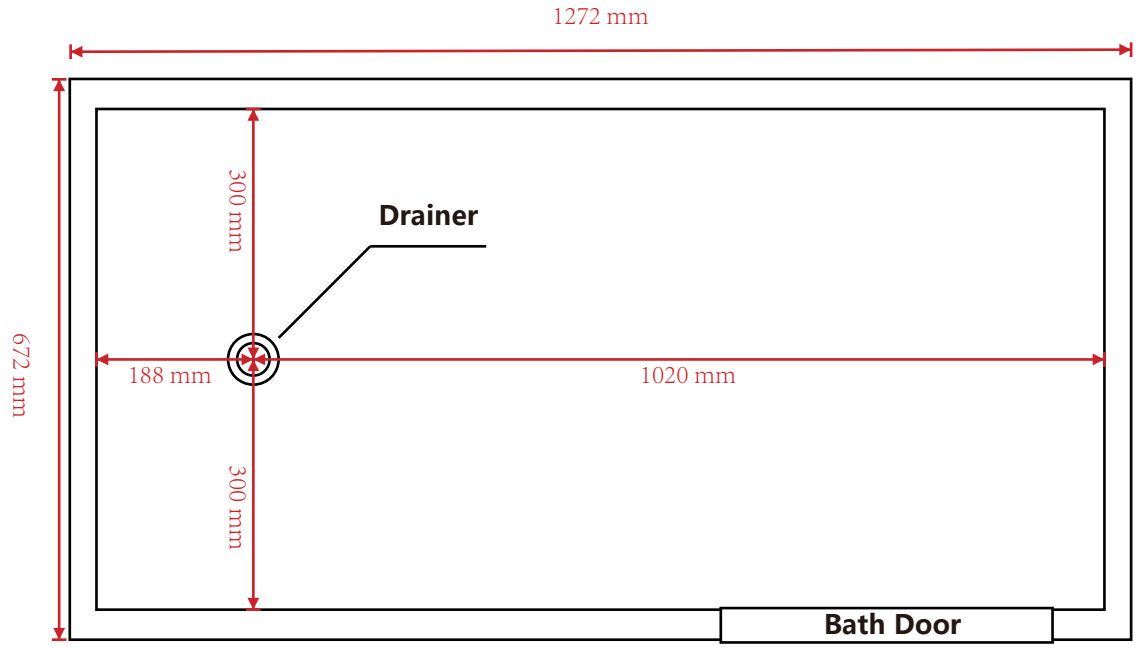

Plan view of triangular baffle

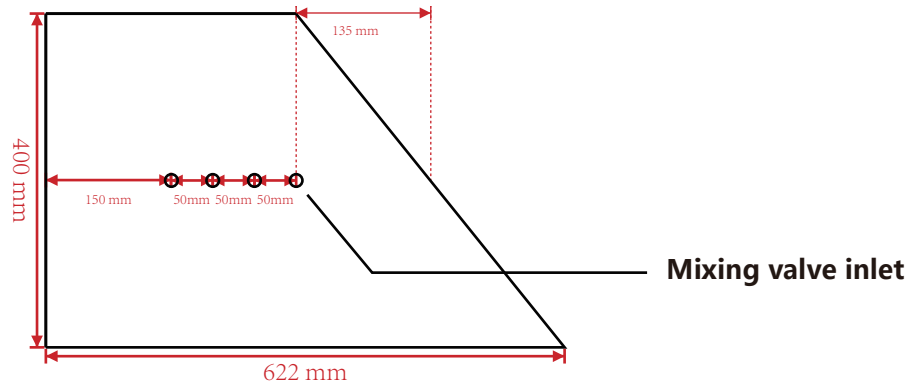

Plan view of backboard

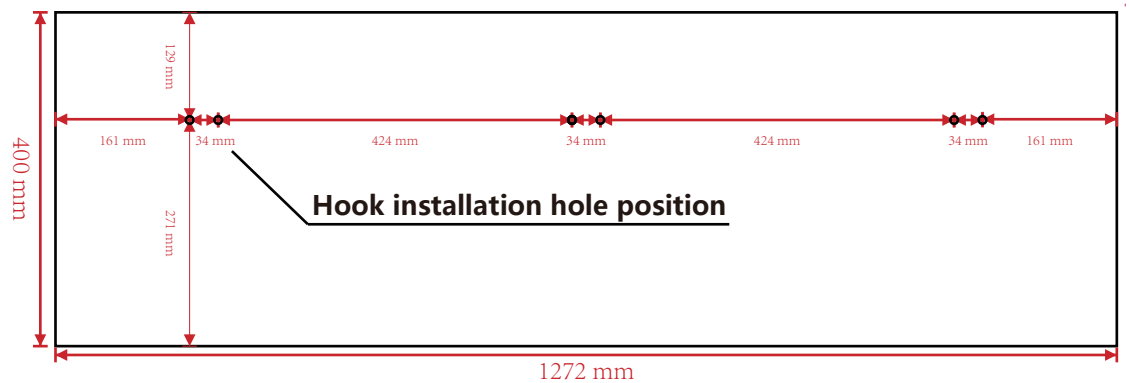

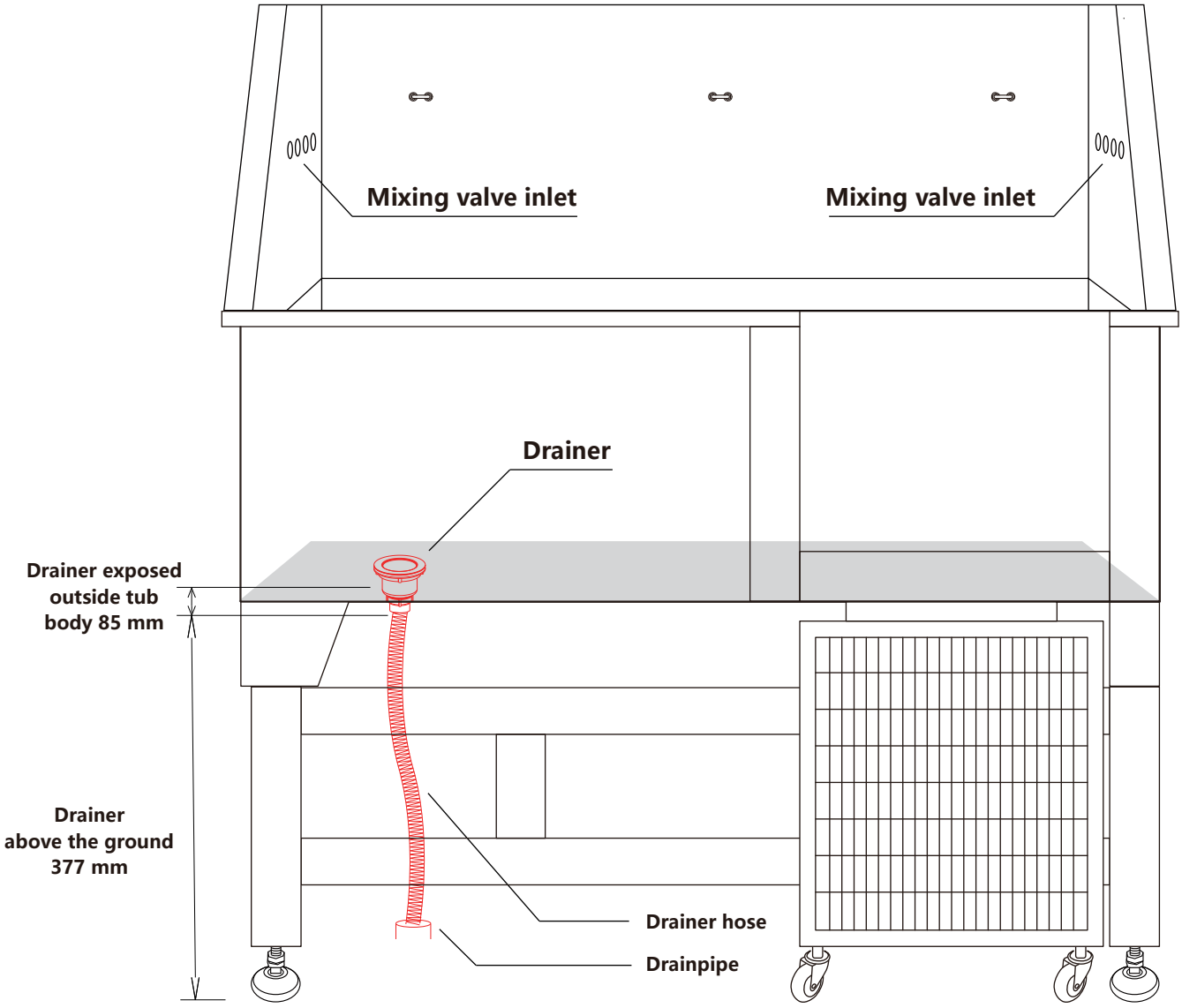

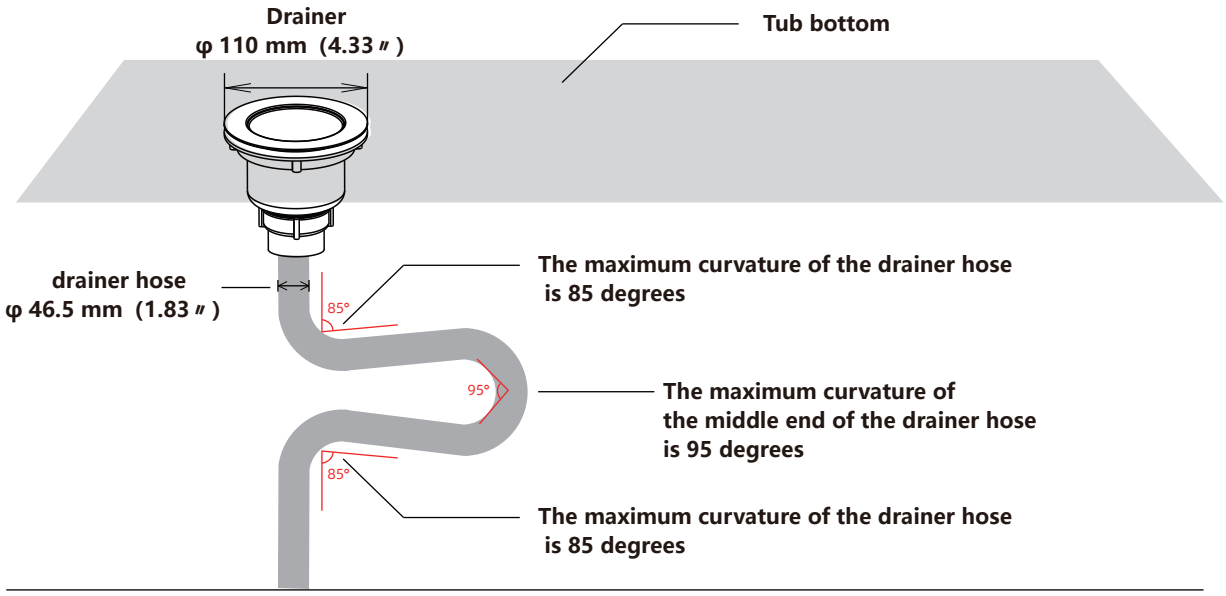

Do not exceed the maximum angle of the drainer hose, otherwise it will bend and affect the drainage effect.

Instructions for use

The storage method of the bathtub baffle is shown in the following figure

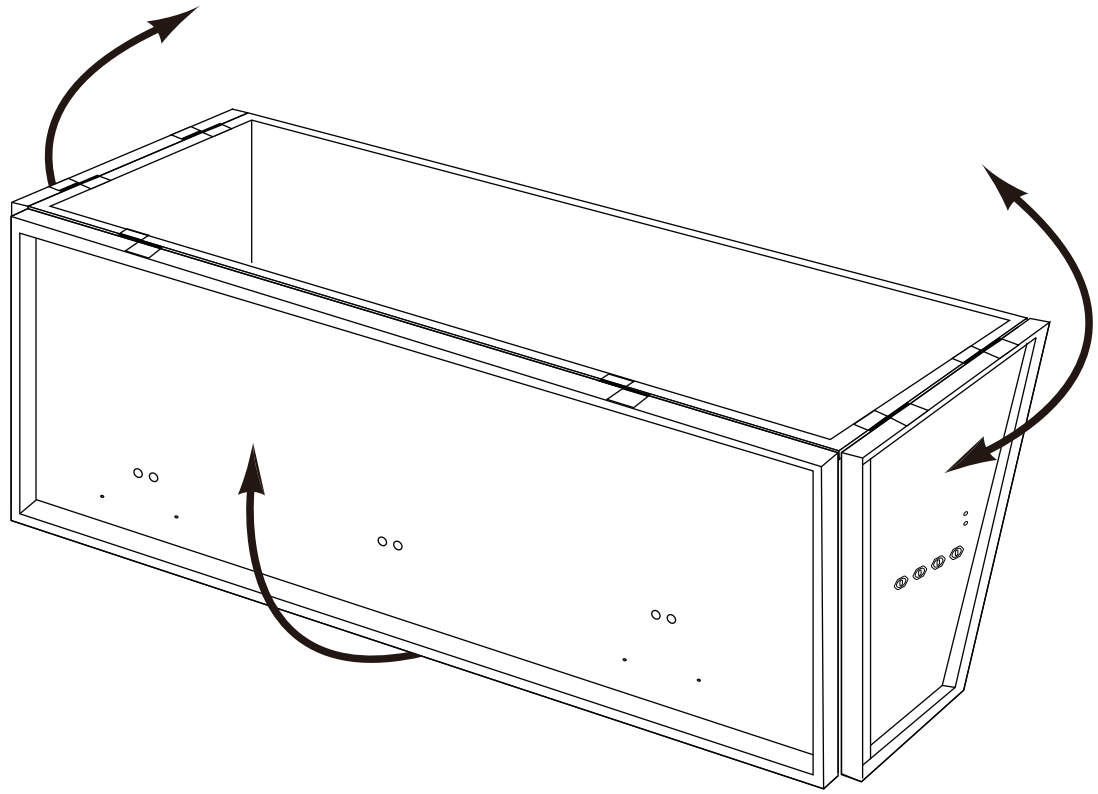

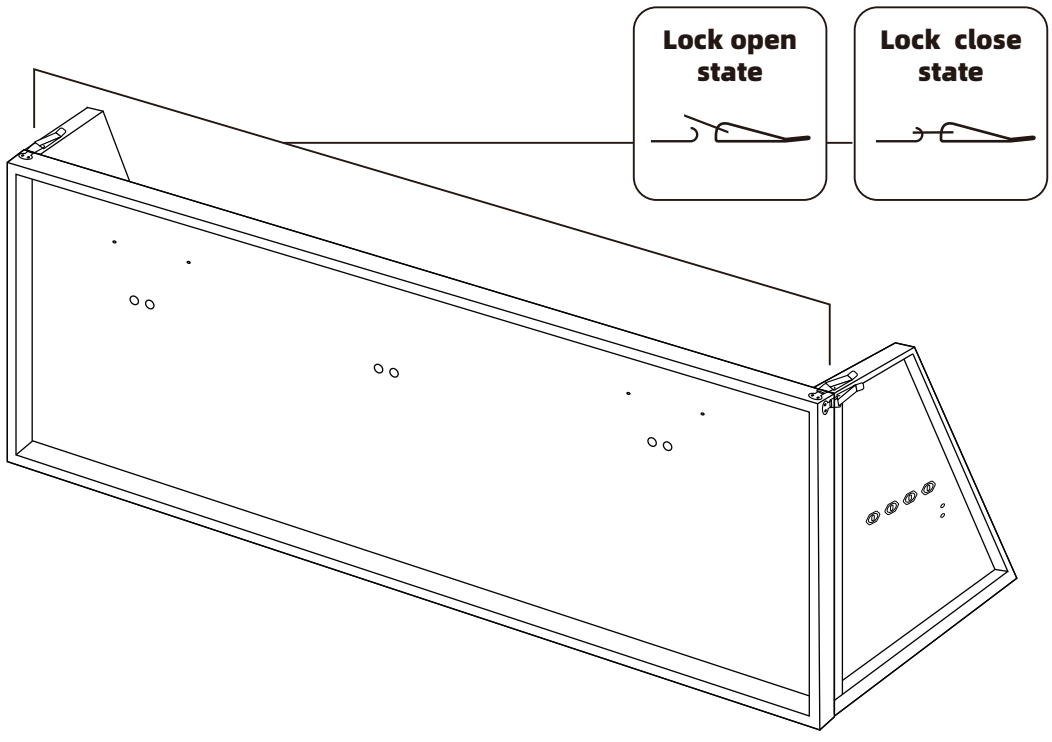

BTS-130N

Instructions for use

The usage method of pet stair is as follows

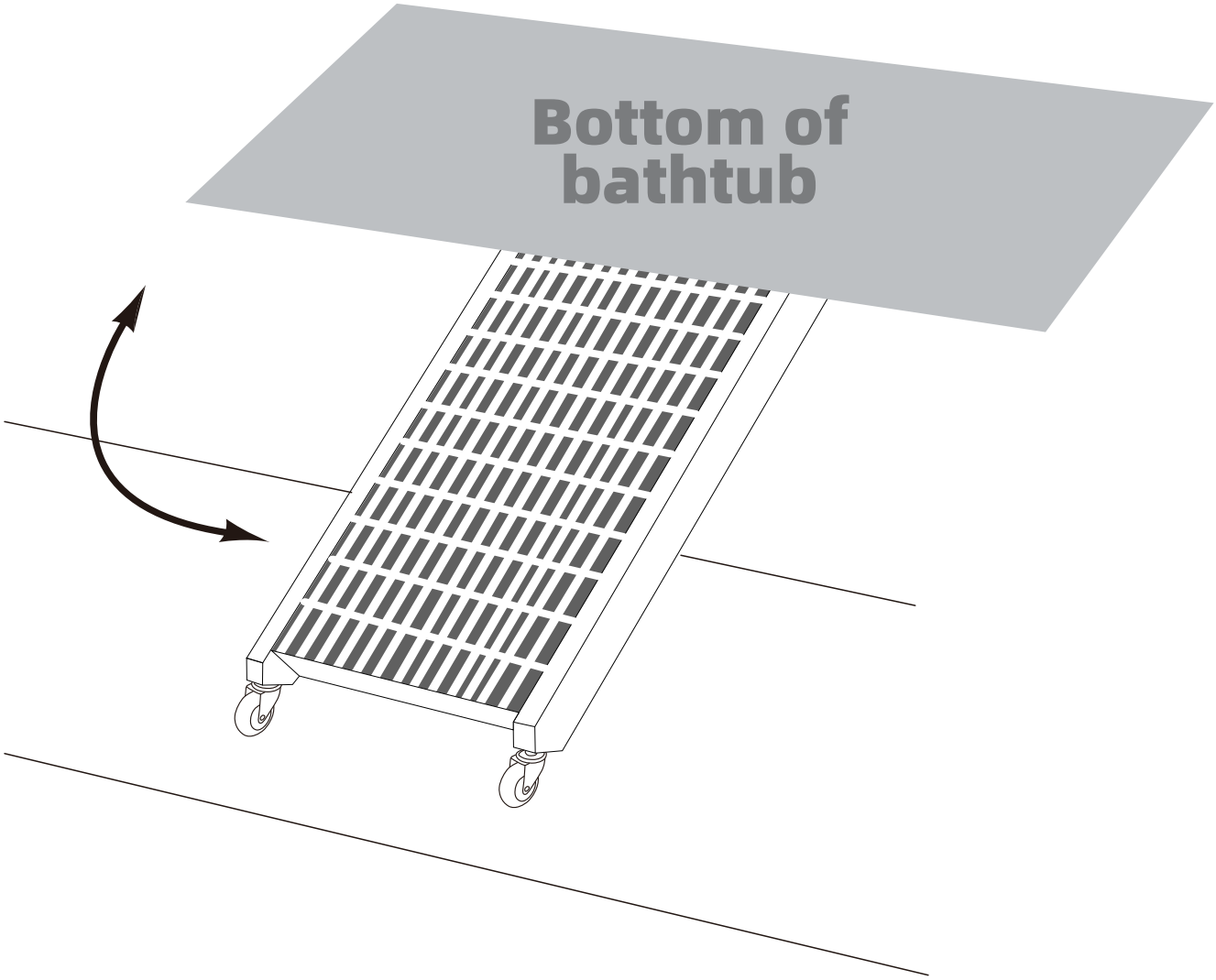

BTS-130N

Pet anti slip pedal assembly retrieval and placement method:

Firstly, both anti slip pedals are placed in parallel,
Then, the anti slip booster pedal is stacked on top of the anti slip pedal
(the removal sequence is reversed from the insertion sequence).

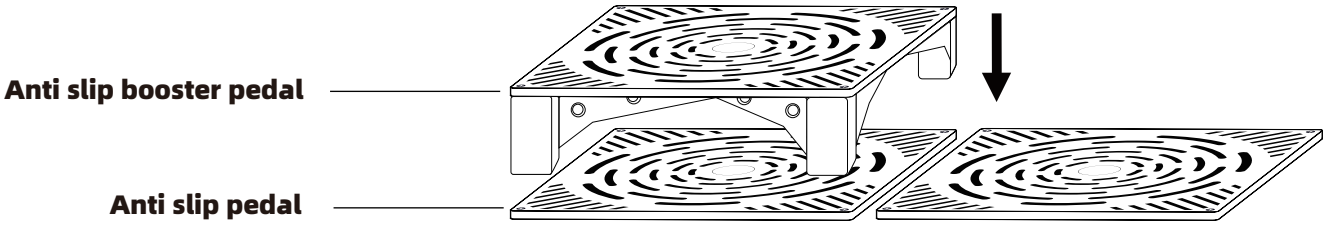

The use of drainer is shown in the following figure

If you need to remove the filter basket, you need to first remove the anti slip pedal before exposing the filter basket of the drain

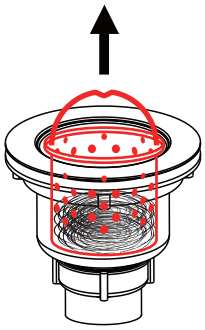

Pull out the handle from the drain and lift out the filter basket

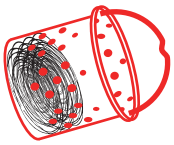



Regularly clean the filter basket, otherwise it will affect the drainage effect

The placement and use are shown in the following figure:

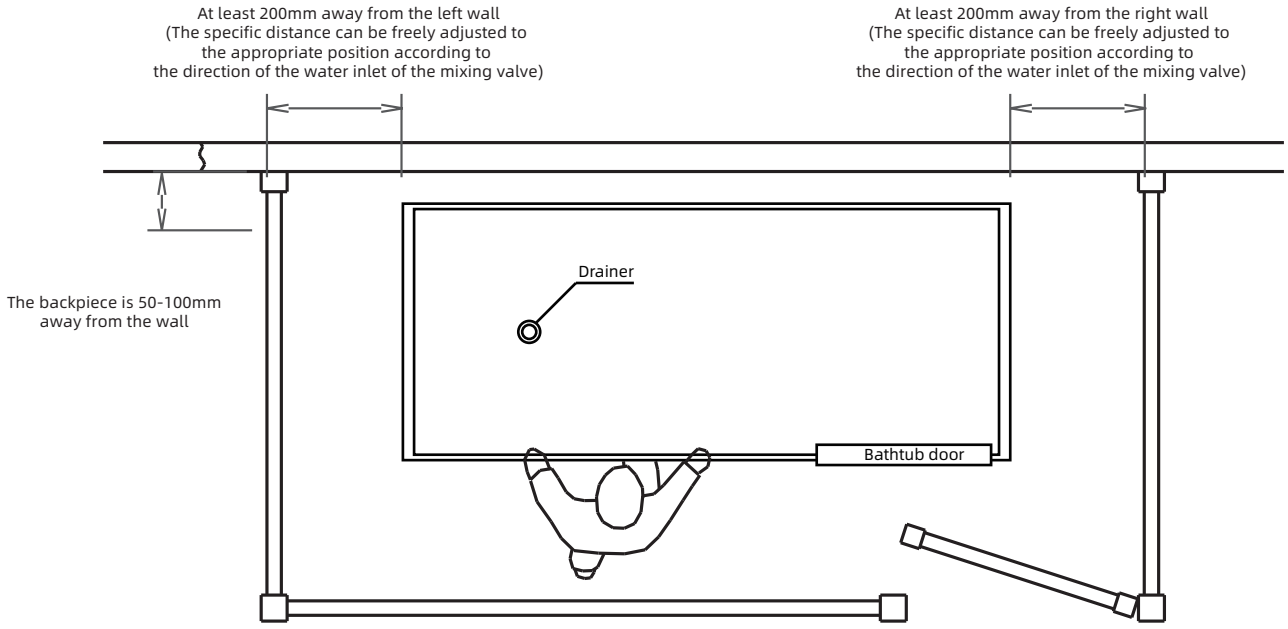

⚠ Note

1. This product is not intended for use by individuals (including children) with physical disabilities, delayed reactions, or mental disorders, unless there is the guardian shall supervise and guide the use of this product from the sidelines, and shall be responsible for the safety of the user;
2. Please do not let children get close to the lifting range of this product to prevent accidents.
3. Please do not disassemble it yourself if there are any abnormalities or malfunctions during use.
4. Do not contaminate with corrosive liquids or solids.
5. If you need to clean the frame and electric parts, you can use a dry towel and a hair dryer to remove any remaining hair on the surface,excrement, water stains, and other dirt.