shernbao®

Round Hydraulic Table User Manual

FT-805



Schematic diagram of accessories

1 **Non-slip Table Top * 1**

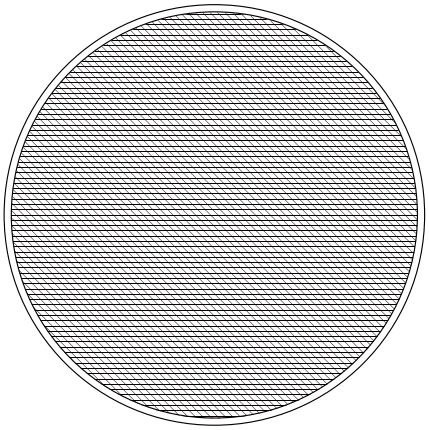

2 **Frame * 1**

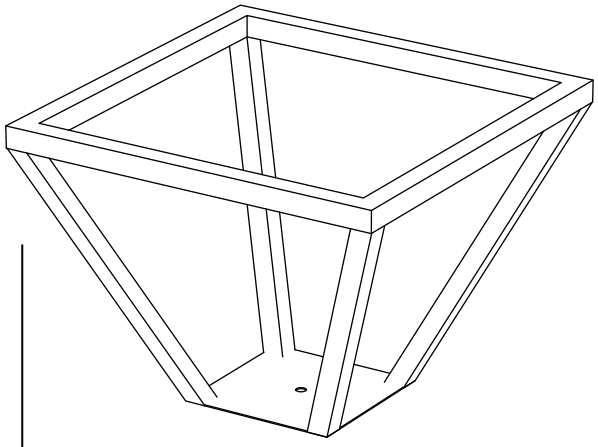

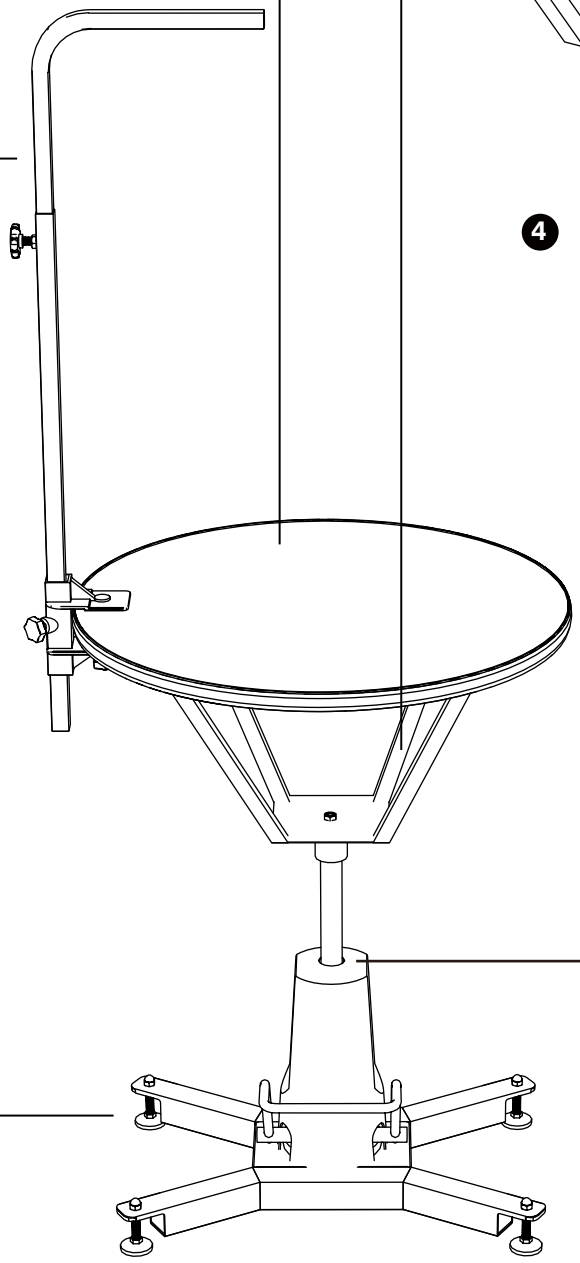

3 **Dual functional grooming arm set * 1**

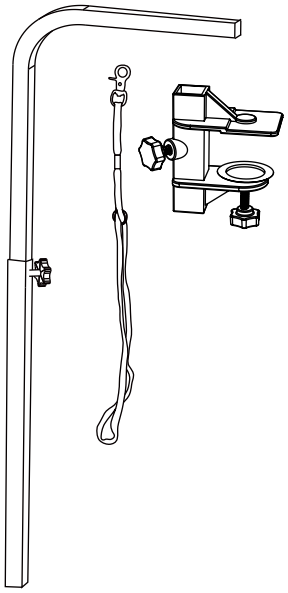

4 **Screws, flat washers * 8**

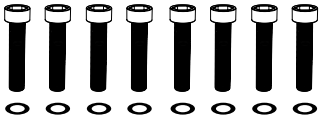

6 **Hydraulic pump set * 1**

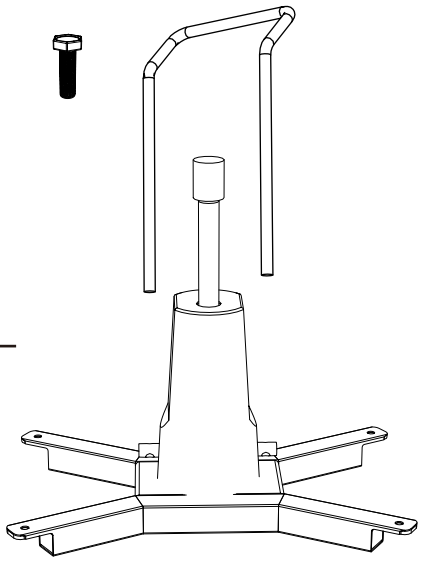

5 **Adjustable feet * 4**

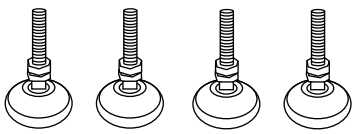

Accessories

List	Model No.	Spare Parts Name	QTY
1	FT-805 -01	Non-slip Table Top	1
2	FT-805-02	Frame	1
3	FT-8001	Dual functional grooming arm set	1
4	FT-023	Screws, flat washers	8
5	BTS-T005	Adjustable feet	4
6	FT-024	Hydraulic pump set	1

The following accessories need to be installed by oneself

1 Non-slip Table Top * 1

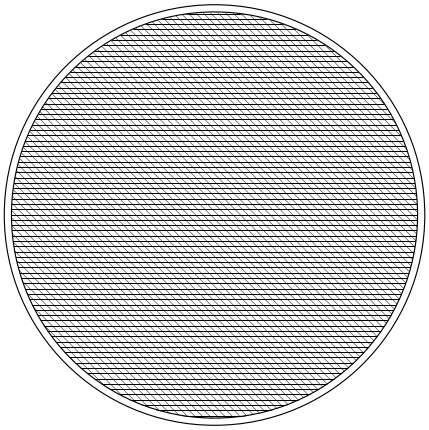

2 Frame * 1

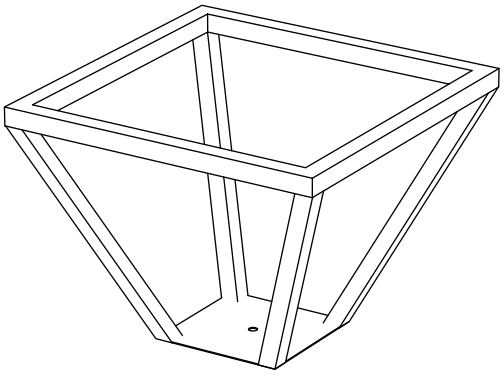

3 Dual functional grooming arm set * 1

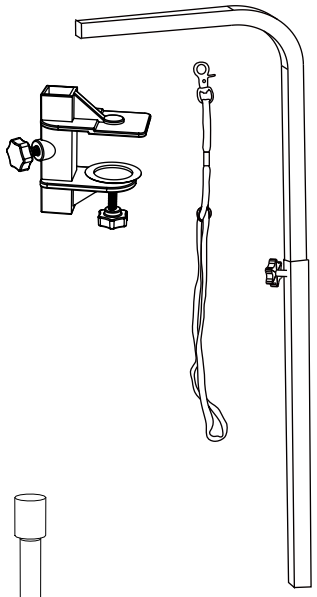

2 Screws, flat washers * 8

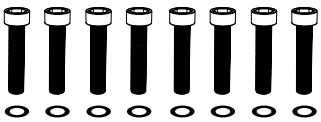

6 Hydraulic pump set * 1

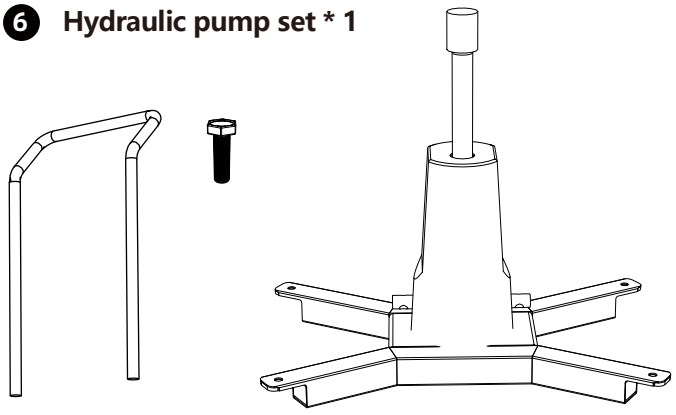

5 Adjustable feet * 4

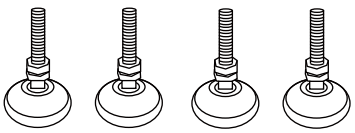

After receiving the product, please first check if the packaging is severely damaged.Open the packaging and check if the accessories are complete.If there are any quality issues with the product.

www.groomart.hu I hello@groomart.hu I www.groomart.eu

Installation instructions

组合安装如下图所示：

① Loos en the fixing screws of the hydraulic pump.

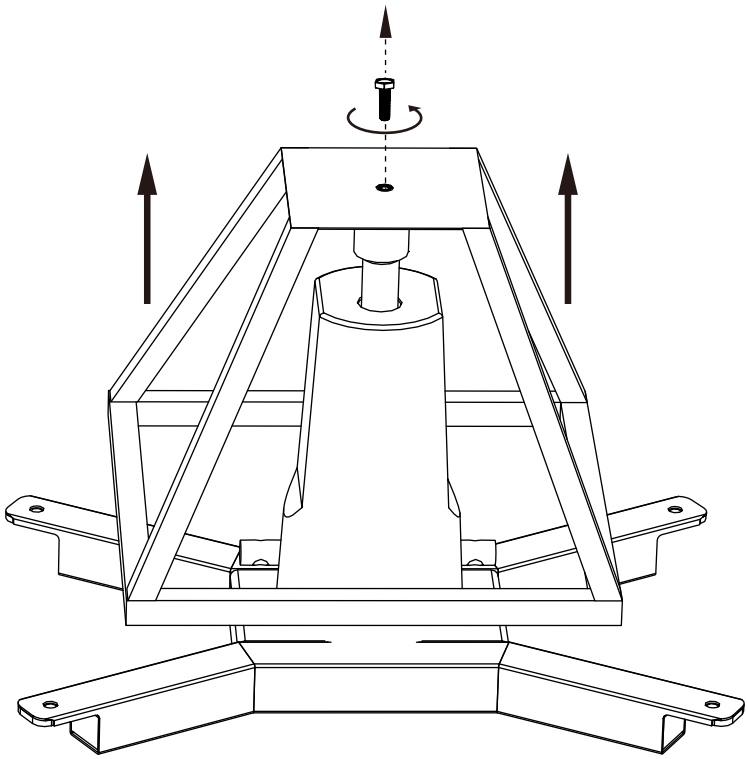

② Use screws and flat washers to secure the tabletop to the frame.

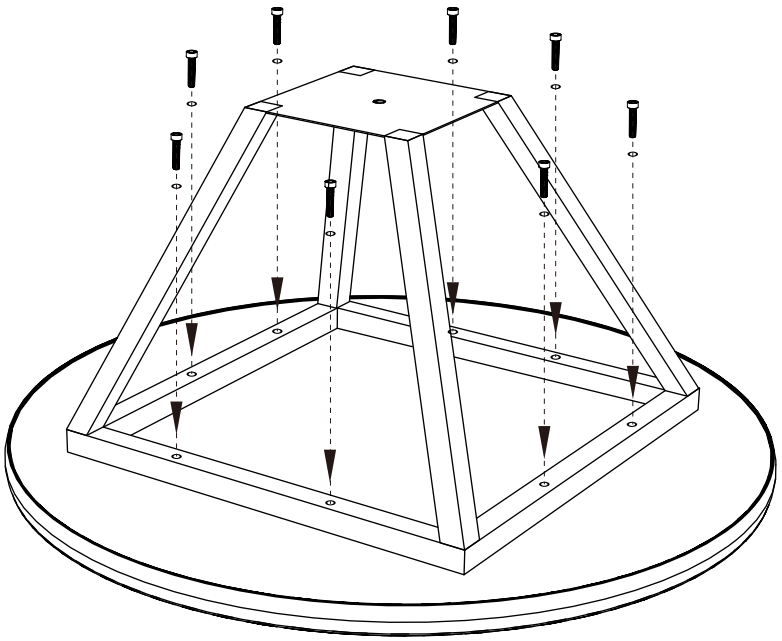

Installation instructions

③ Use M10*40 hex screws to tighten according to the diagram.
Install the adjustable feet in the proper position of the base and lock them tightly.

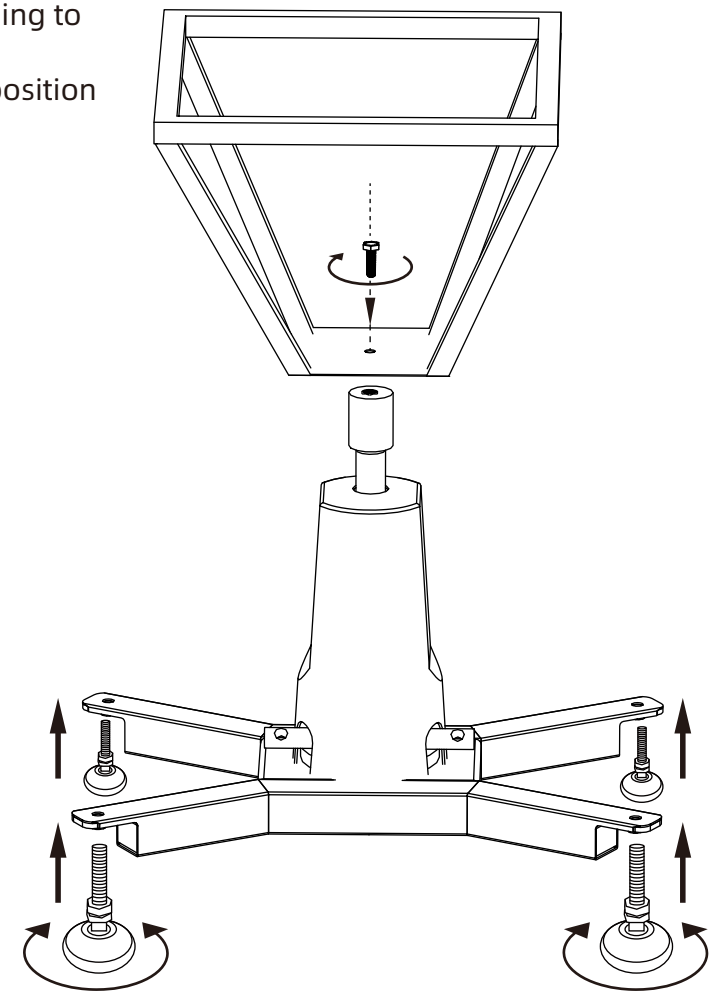

③ Correctly install the hydraulic foot pedal according to the diagram.

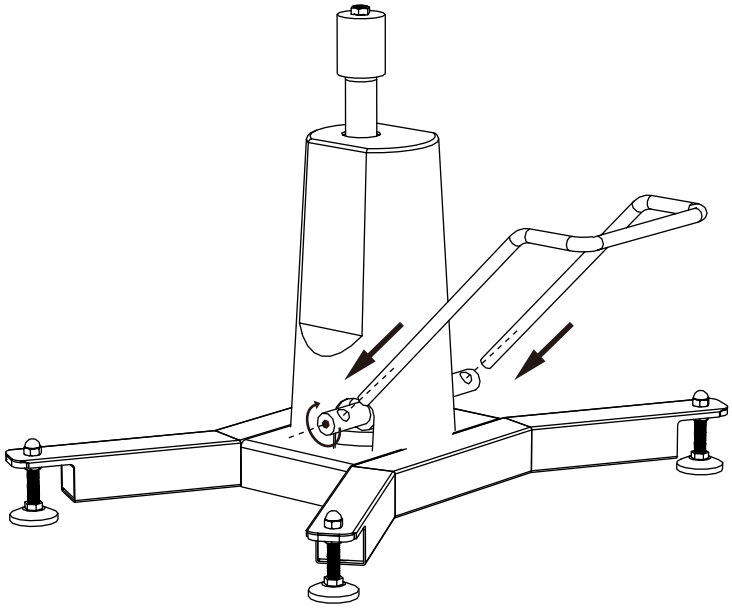

Installation instructions

Dual functional grooming arm installation as below:

① Put the table clamp into the center position of table top,and lock the bottom handle screw clockwise.

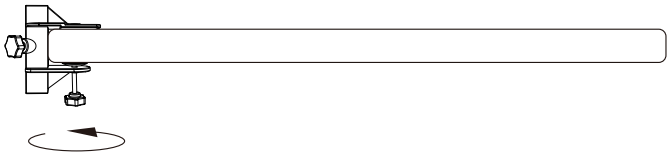

② Turn the handle screw counterclockwise to lift the single arm to the right position. Then, tighten the screw clockwise.

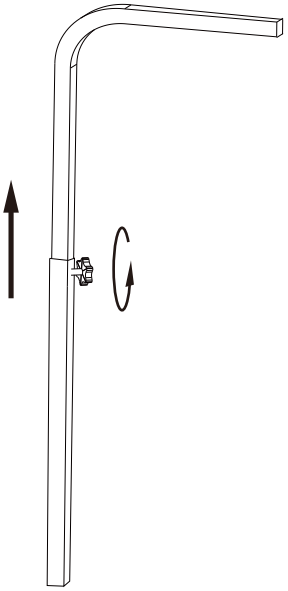

③ Insert the assembled single arm downward against the hole of table clamp, reserve 4~6cm length, and lock the screw of clamp clockwise.

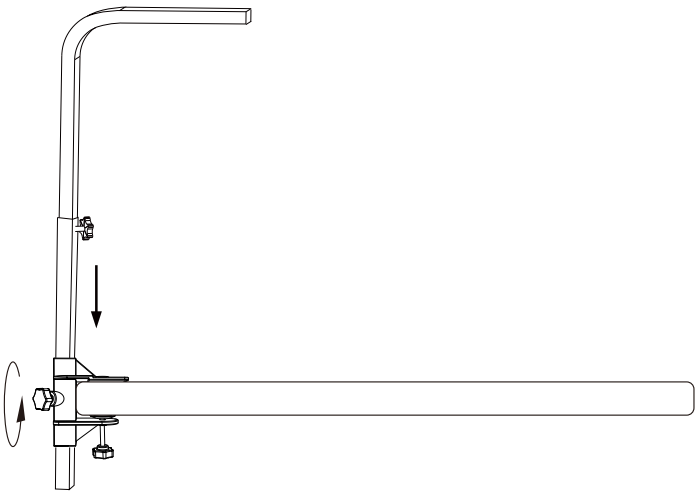

⑤ The nylon rope can be locked to the hole above the single arm, which is used to hold pets during grooming.

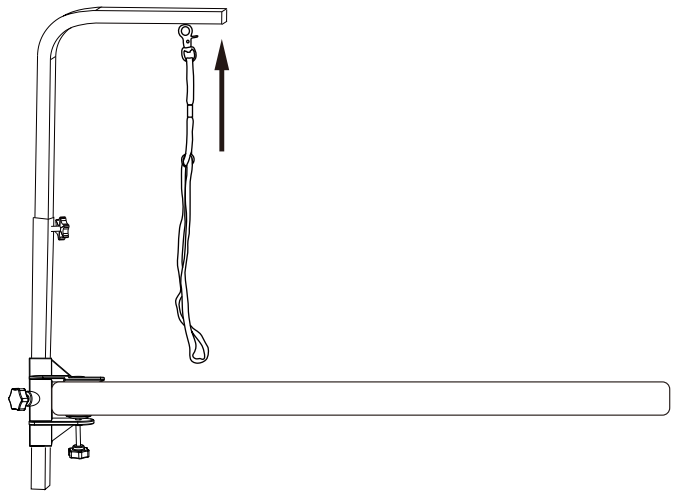

www.groomart.hu I hello@groomart.hu I www.groomart.eu

Parameter

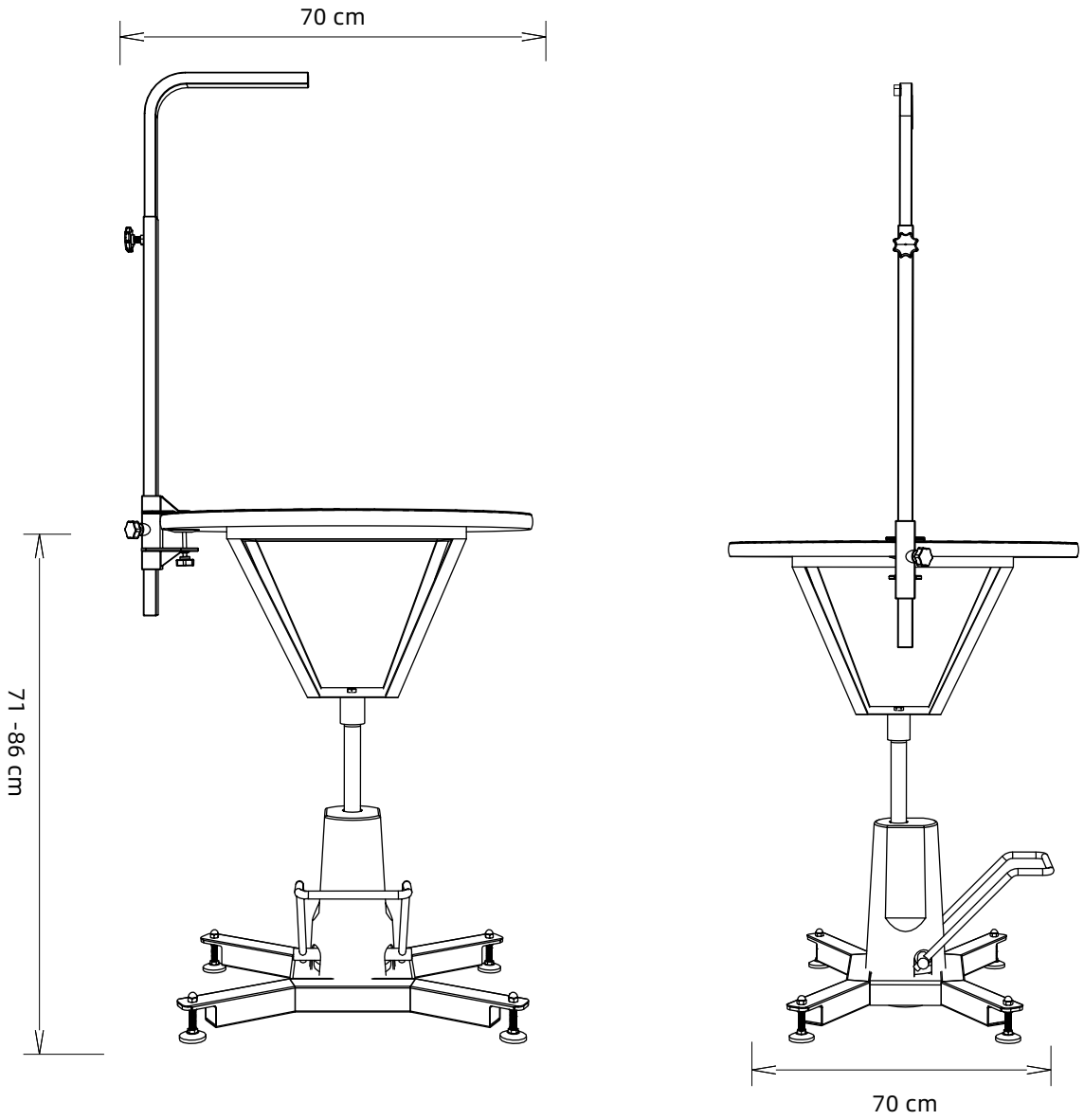

Front view **Side view**

Type: FT-805			
Grass weight(kg)	A: 7 kg B: 25 kg	Cbm	A: 0.038 cbm B: 0.111 cbm
Product dimensions (cm)		70×70×71-86 H	
Package dimensions (cm)		A: 74×7×74 H	B: 52×48×44.5 H

⚠ Note

1. This product is not intended for use by individuals (including children) with physical disabilities, delayed reactions, or mental disorders, unless there is the guardian shall supervise and guide the use of this product from the sidelines, and shall be responsible for the safety of the user;
2. Please do not let children get close to the lifting range of this product to prevent accidents.
3. Please do not disassemble it yourself if there are any abnormalities or malfunctions during use.
4. Do not contaminate with corrosive liquids or solids.
5. If you need to clean the frame , you can use a dry towel and a hair dryer to remove any remaining hair on the surface,excrement, water stains, and other dirt.