shernbao®

Electric Lifting Grooming Table User Manual

FT-808P



Schematic diagram of accessories

1 Non-slip Table Top*1

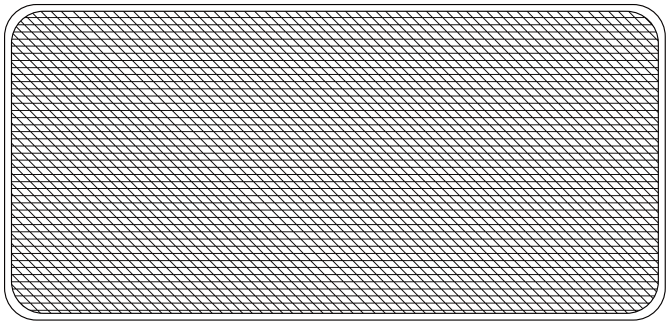

2 Grooming Table Frame*1

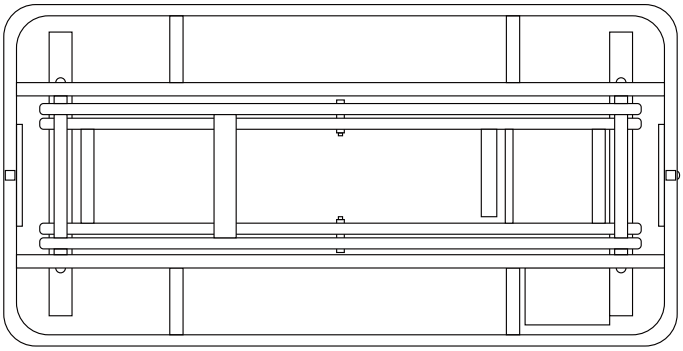

3 Over-head Grooming Arm Set*1

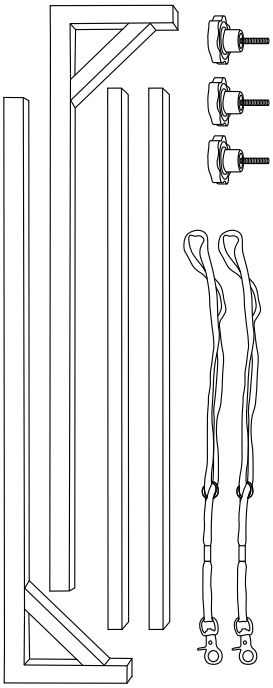

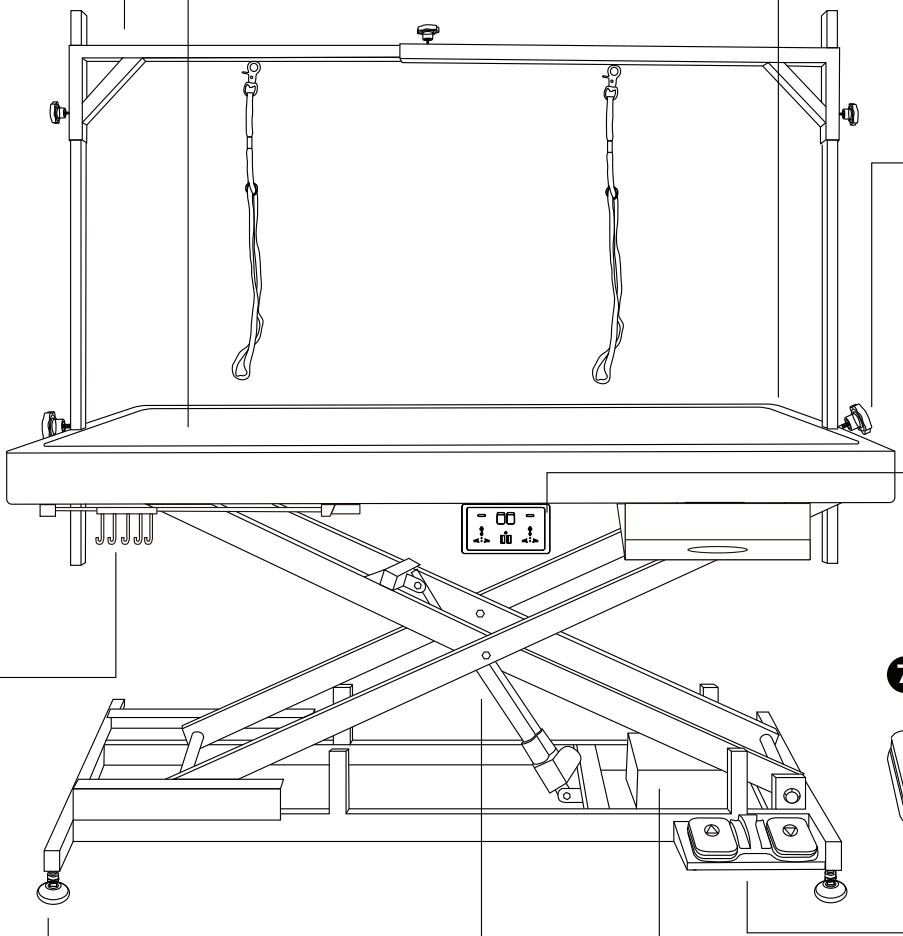

4 M10*25 Handle screw*2

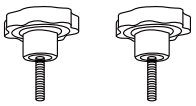

5 Power Socket *1

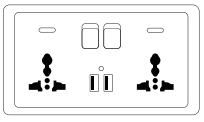

7 Foot pedal

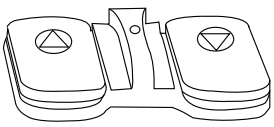

6 Stainless Steel Hook*5



8 Adjustable feet*4

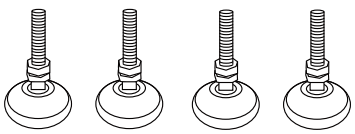

9 Linear actuator 220



10 Transformer

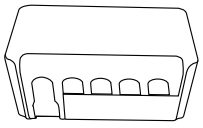

11 ALCI

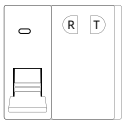

FT-808P

Accessories

List	Model No.	Spare Parts Name	QTY
1	FT-808-01	Non-slip Table Top	1
2	FT-808-02	Grooming Table Frame	1
3	FT-001	Over-head Grooming Arm Set	1
4	FT-012	M10*25 Handle screw	2
5	FT-013	Power Socket	1
6	FT-014	Stainless Steel Hook	5
7	BTS-T003	Foot pedal	1
8	BTS-T005	Adjustable feet	4
9	BTS-T004	Linear actuator 220	1
10	BTS-T006	Transformer	1
11	FT-015	ALCI	1

The following accessories need to be installed by oneself

❸

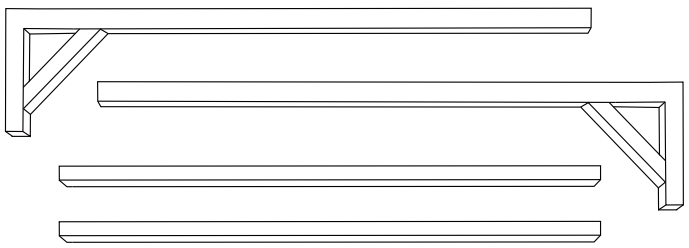

Grooming arm

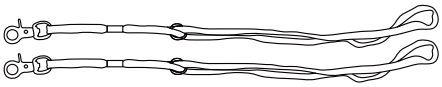

Snap-in Nylon Neck Harness*2

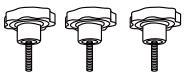

M8*16 Handle screw *3

❹

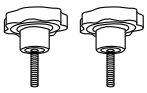

M10*25 Handle screw*3

❽

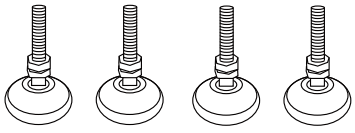

Adjustable feet *4

After receiving the product, please first check if the packaging is severely damaged.Open the packaging and check if the accessories are complete.If there are any quality issues with the product.

Installation instructions

Over-head Grooming Arm Set Installation As Below:

① Loosen the screws counterclockwise. According to the width of the table, push the arm outward to the appropriate position,and then lock up the top handle screw.

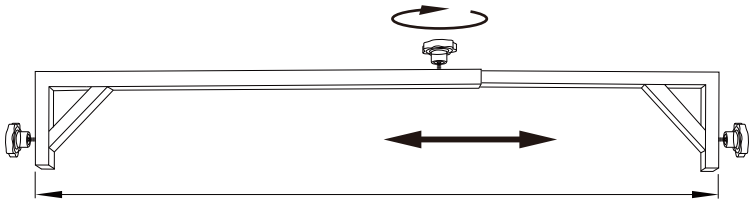

② Loosen the screws on both sides of the grooming arm counterclockwise.
Insert the arm into the suspension arm separately, and keep the height on both sides consistent, and then lock up the handle screws on both sides.

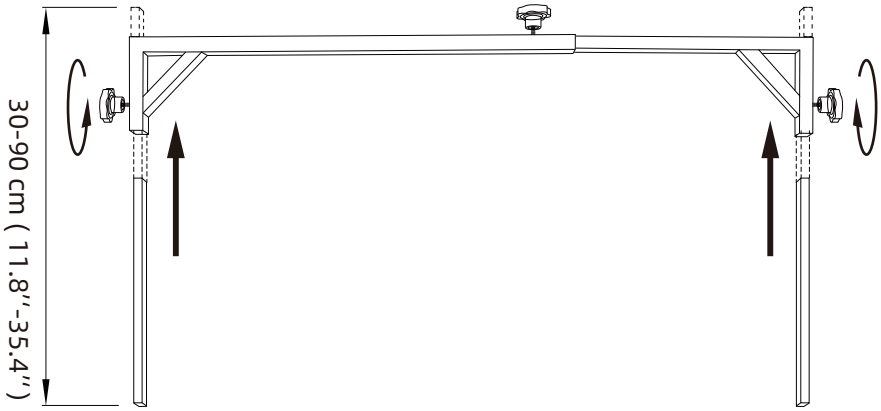

③ Use the over-head grooming arm set insert into the two side hole on the table,
Leave a length of 4-6cm.Use M10*25 handle screws to fix the two side grooming arms.

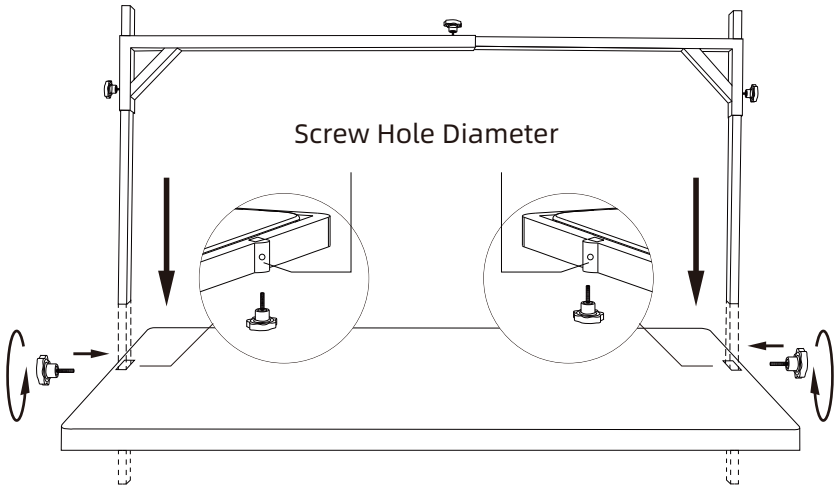

Installation instructions

④ Snap-in Nylon Neck Harness, can be locked to the hole above the grooming arm, used to control the pets during the grooming process.

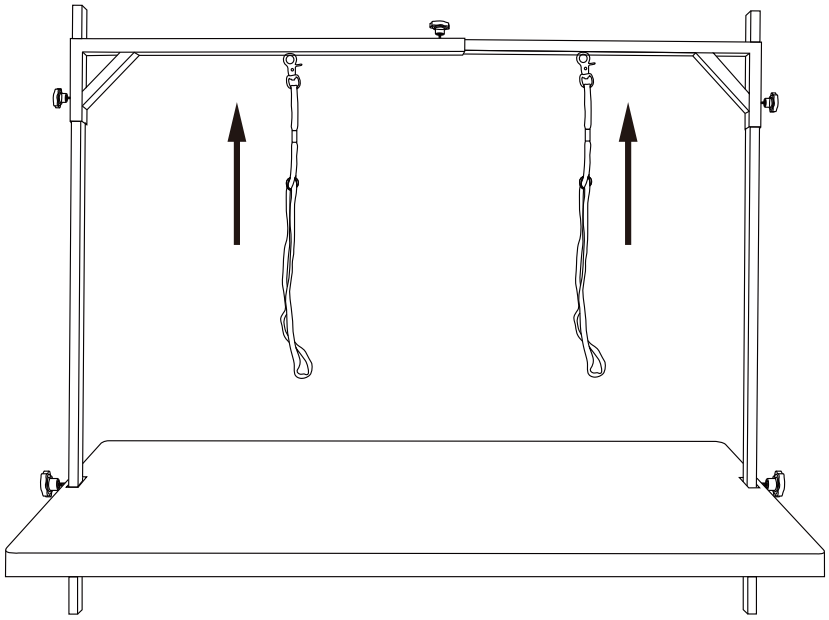

Adjustable Feet Installation Method As Follows:

Install the adjustable feet in the proper position of the base and lock them tightly

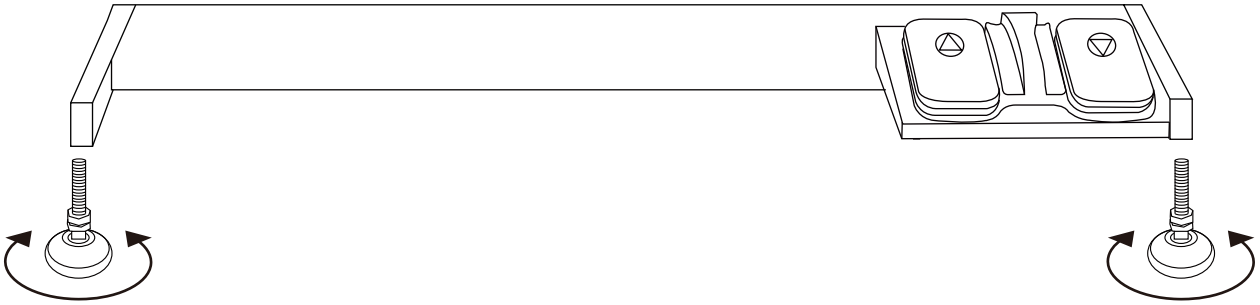

Parameter

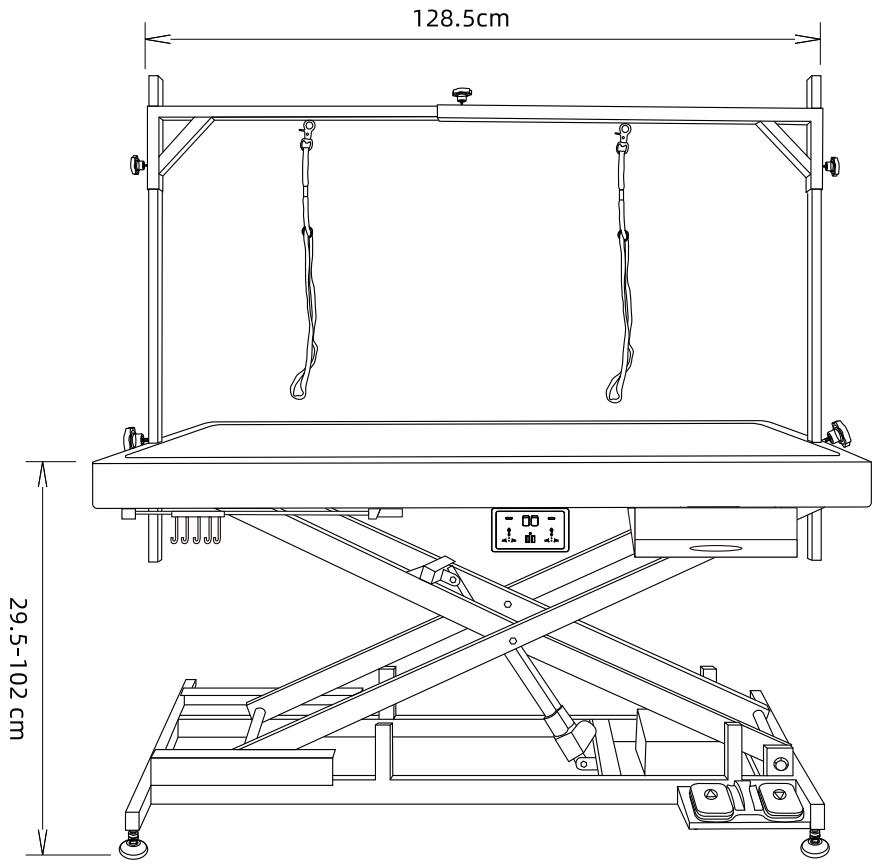

Front view

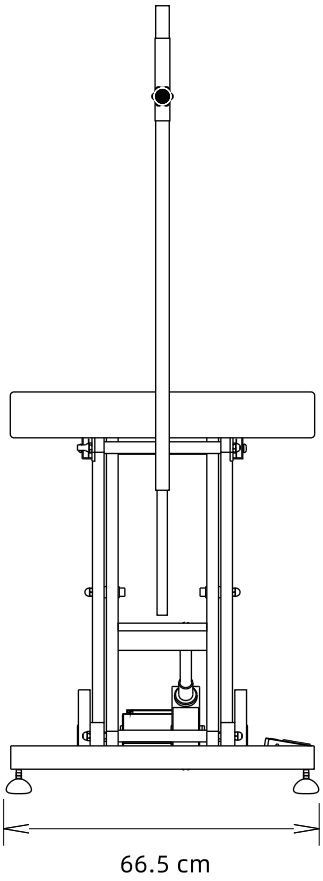

Side view

Type: FT-808P			
Net weight(kg)	56	Grass weight(kg)	62
Voltage	110-240V	Cbm	0.251
Product dimensions (cm)	128.5×66.5×29.5-102	Package dimensions (cm)	131.5×69.5×27.5H

Instructions for use

The use of the ALCI is as follows:

Max load power 3000w，IP grade IPX4



R Press it before close " R " T Press once per month

Power socket usage:

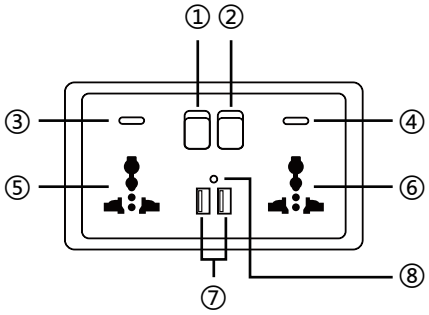

Left side switch①:
Power Socket⑤ and USB port⑦ ON/OFF status
Power Indicator light③ and USB port Indicator light ⑧ display ON/OFF status.

Right side switch②:
Power Socket⑥ ON/OFF status
Power Indicator light④ display ON/OFF status

⑤⑥power socket (Max Power 3000W,
Please do not use the high-power electrical appliance long time)
⑦USB port output 5V 2.1A

Adjust the leveler as below:

Rotate the leveler to a suitable height

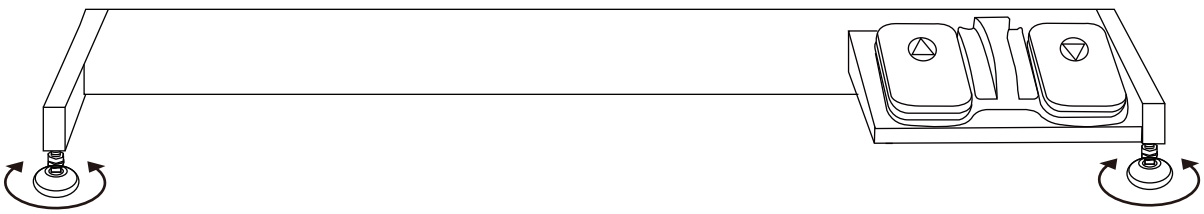

Instruction of foot pedal as below:

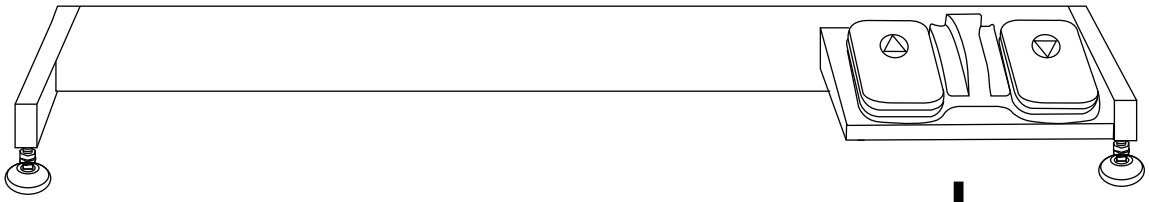

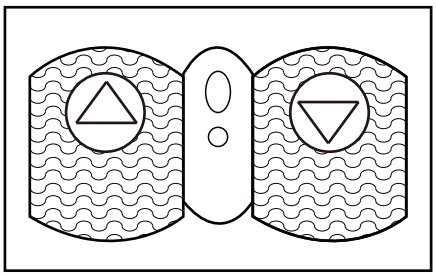

Stepping on the pedal to lift up

Stepping on the pedal to go down

⚠ Note

1. This product is not intended for use by individuals (including children) with physical disabilities, delayed reactions, or mental disorders, unless there is the guardian shall supervise and guide the use of this product from the sidelines, and shall be responsible for the safety of the user;
2. Please do not let children get close to the lifting range of this product to prevent accidents.
3. Please do not disassemble it yourself if there are any abnormalities or malfunctions during use.
4. Do not contaminate with corrosive liquids or solids.
5. If you need to clean the frame and electric parts, you can use a dry towel and a hair dryer to remove any remaining hair on the surface,excrement, water stains, and other dirt.
6、Please check the power cable periodically. If the plug, power cable, or controller is damaged, do not continue to use it.
7、Do not use water to flush the power controller, foot pedal, and linear actuator . Otherwise, the electric control components will be damaged, and even electric shock may occur.