shernbao®

New Circular Grooming Table User Manual

FT-831



Schematic diagram of accessories

1 **Non-slip Table Top*1**

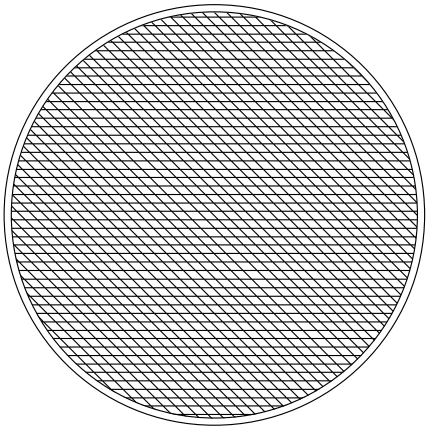

2 **Grooming Table Frame*1**

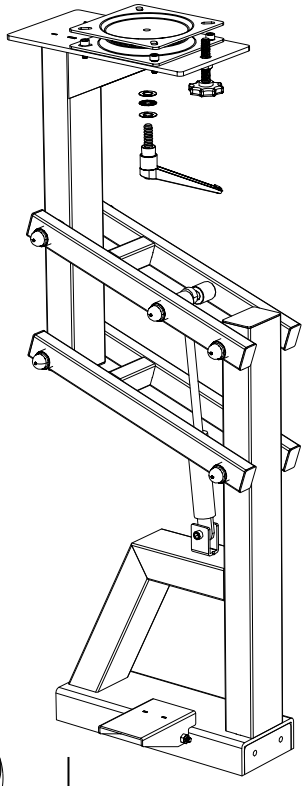

3 **Single grooming arm set *1**

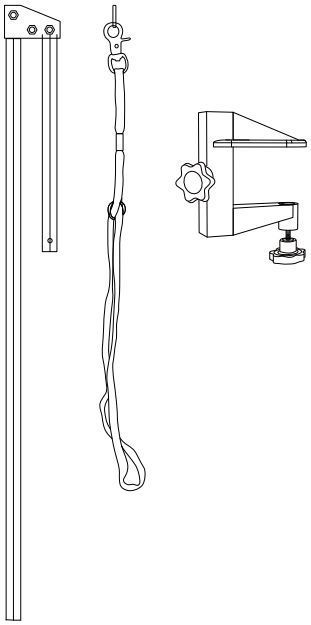

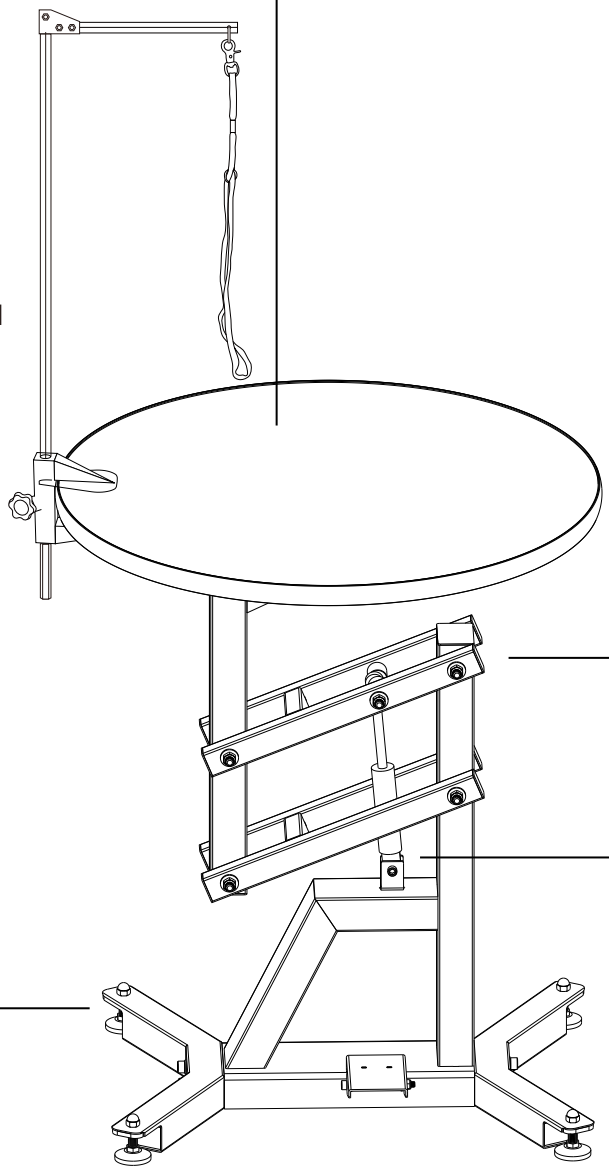

4 **Air pump*1**

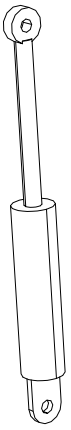

5 **Support feet set *1**

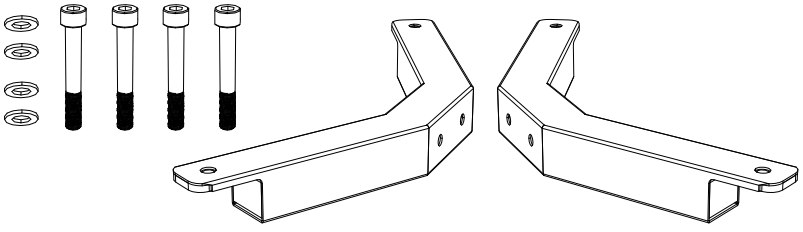

6 **Adjustable feet*4**

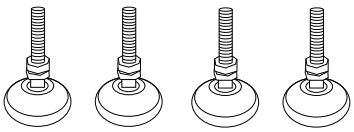

FT- 831

Accessories

List	Model No.	Spare Parts Name	QTY
1	FT-831 -01	Non-slip Table Top	1
2	FT-831-02	Grooming Table Frame	1
3	FT-019	Single grooming arm set	1
4	FT-831-03	Air pump	1
5	FT-831-04	Support feet set	1
6	BTS-T005	Adjustable feet	4

The following accessories need to be installed by oneself

❶ **Non-slip Table Top*1**

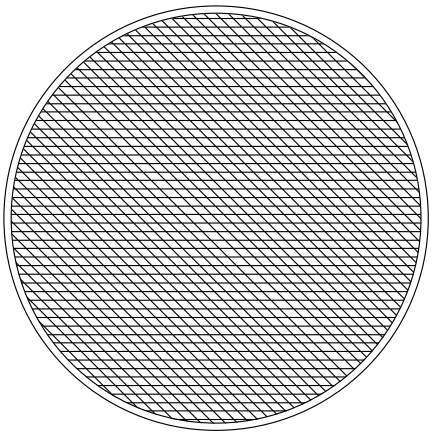

❷ **Grooming Table Frame*1**

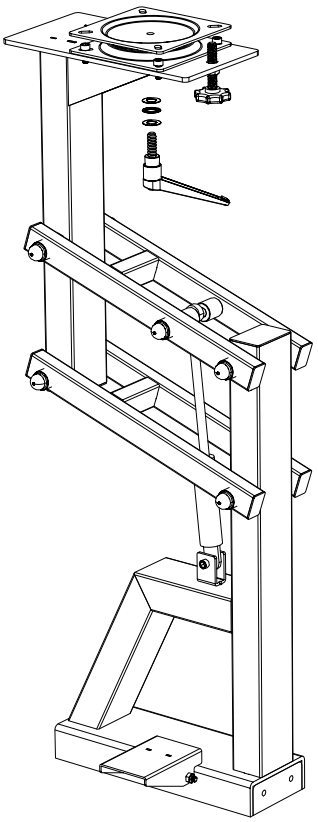

❸ Single grooming arm set ***1**

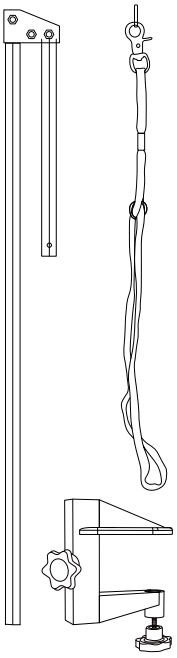

❺ Support feet set ***1**

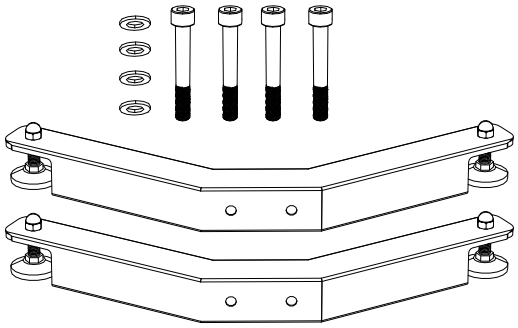

After receiving the product, please first check if the packaging is severely damaged.Open the packaging and check if the accessories are complete.If there are any quality issues with the product.

www.groomart.hu I hello@groomart.hu I www.groomart.eu

Installation instructions

Round tabletop installation as below:

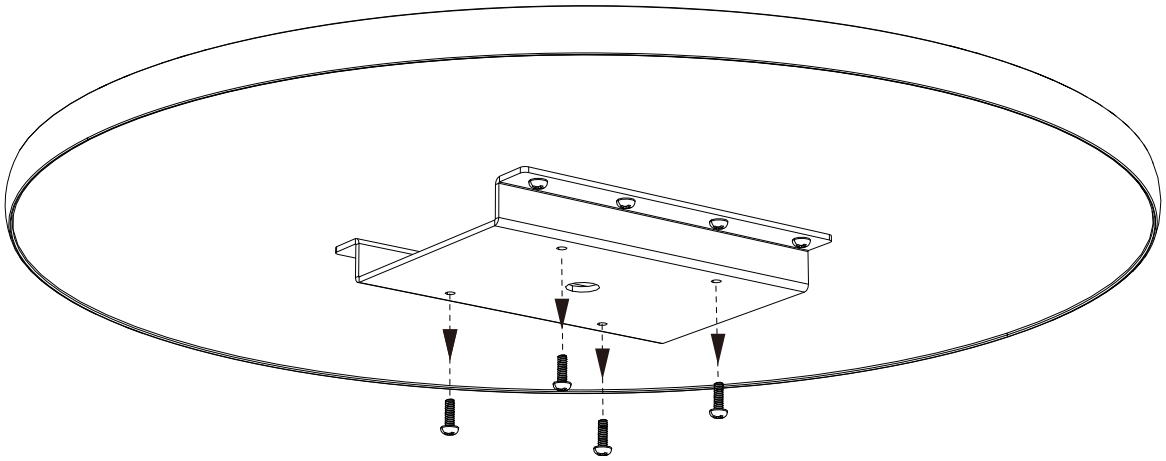

① Remove the four M6*10 cross screws from the bottom counterclockwise

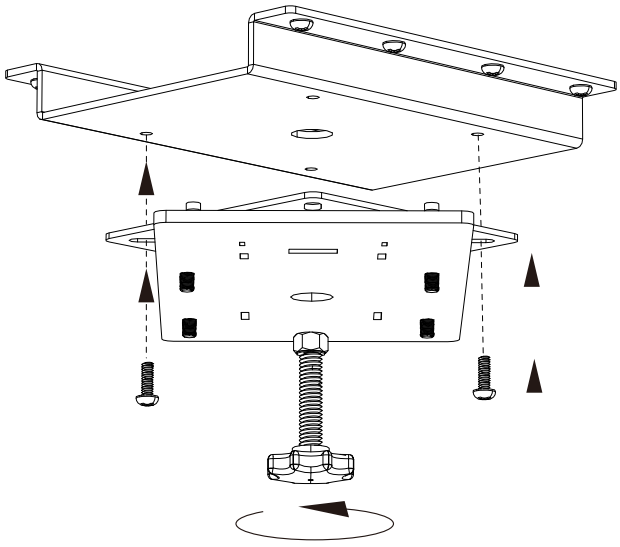

② Rotate the handle screw counterclockwise, turn the frame turntable to 45°, and align the screw holes on the table base. Then, take two of the removed M6*10 cross screws into the holes clockwise. Repeat the above steps to install the other two screws

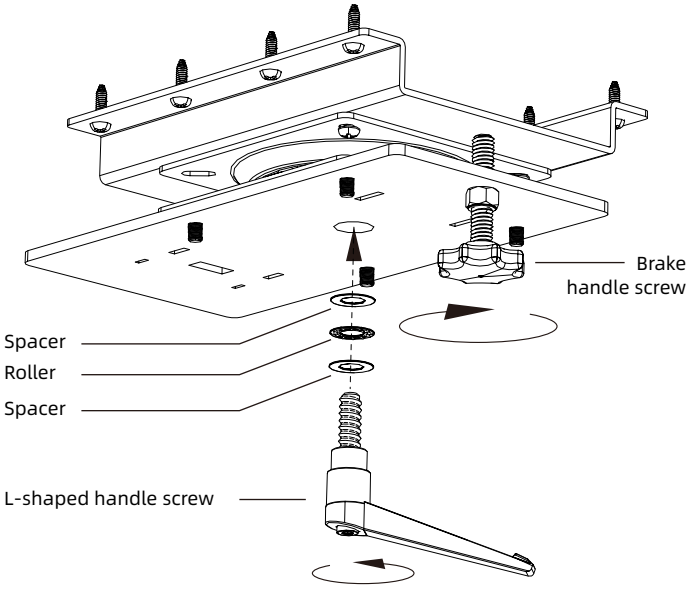

③ Using the included L-shaped handle screw , spacer, and roller from the toolkit, assemble them in the order: spacer - roller - spacer, and thread them onto the L-shaped handle stud as shown in the picture above.After inserting the spacer and roller onto the L-shaped handle screw, tighten it clockwise into the corresponding hole.If you need to secure the tabletop to prevent rotation, tighten the brake handle screw.

Installation instructions

Support feet installation as below:

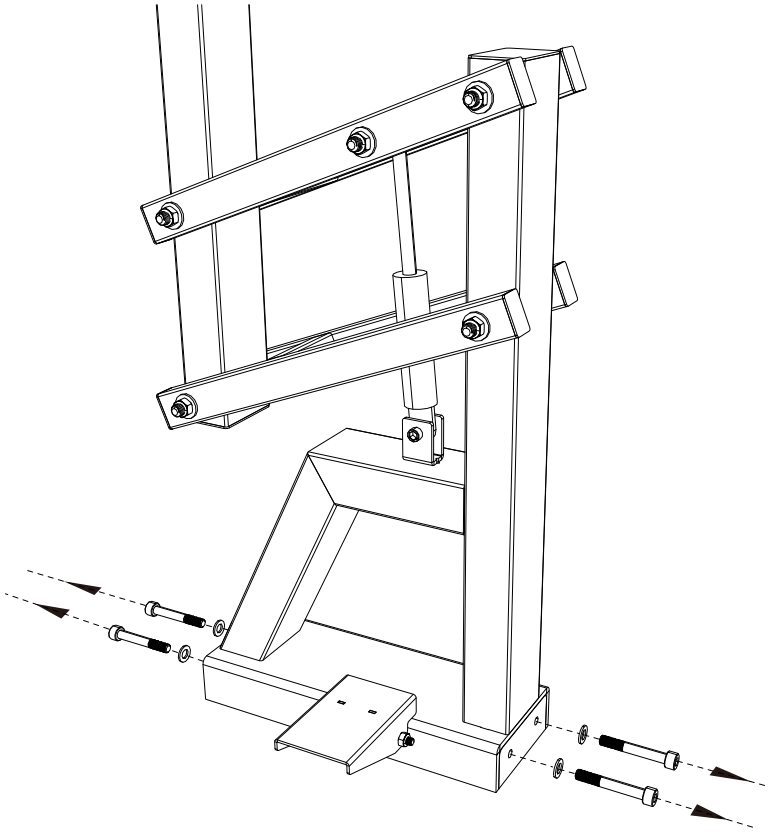

① Remove the four M8*50 hexagon screw and four washers counterclockwise.

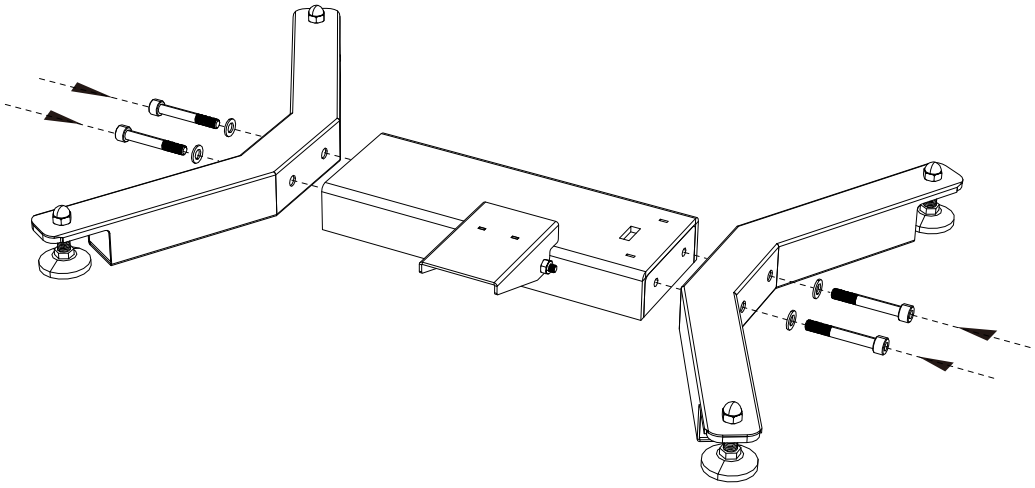

② Install the support feet, washers and M8*50 hexagon screws clockwise on both sides in sequence.

Installation instructions

Single grooming arm installation as below:

① Put the table clamp into the center position of table top,and lock the bottom handle screw clockwise.



② Turn the folding arm 270°clockwise to the horizontal plane.

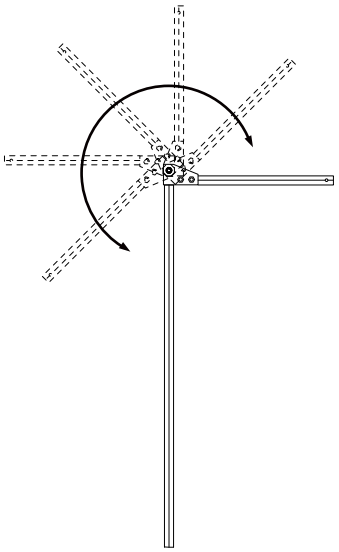

③ Insert the assembled single arm downward against the hole of table clamp, reserve 4~6cm length, and lock the screw of clamp clockwise.

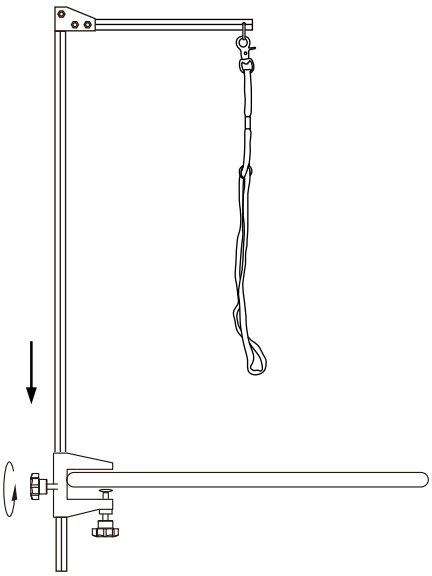

⑤ The nylon rope can be locked to the hole above the single arm, which is used to hold pets during grooming.

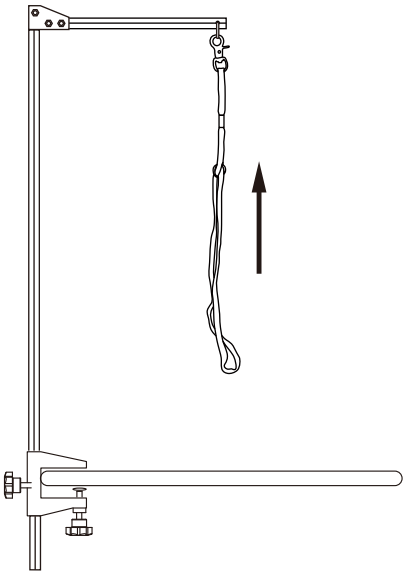

Parameter

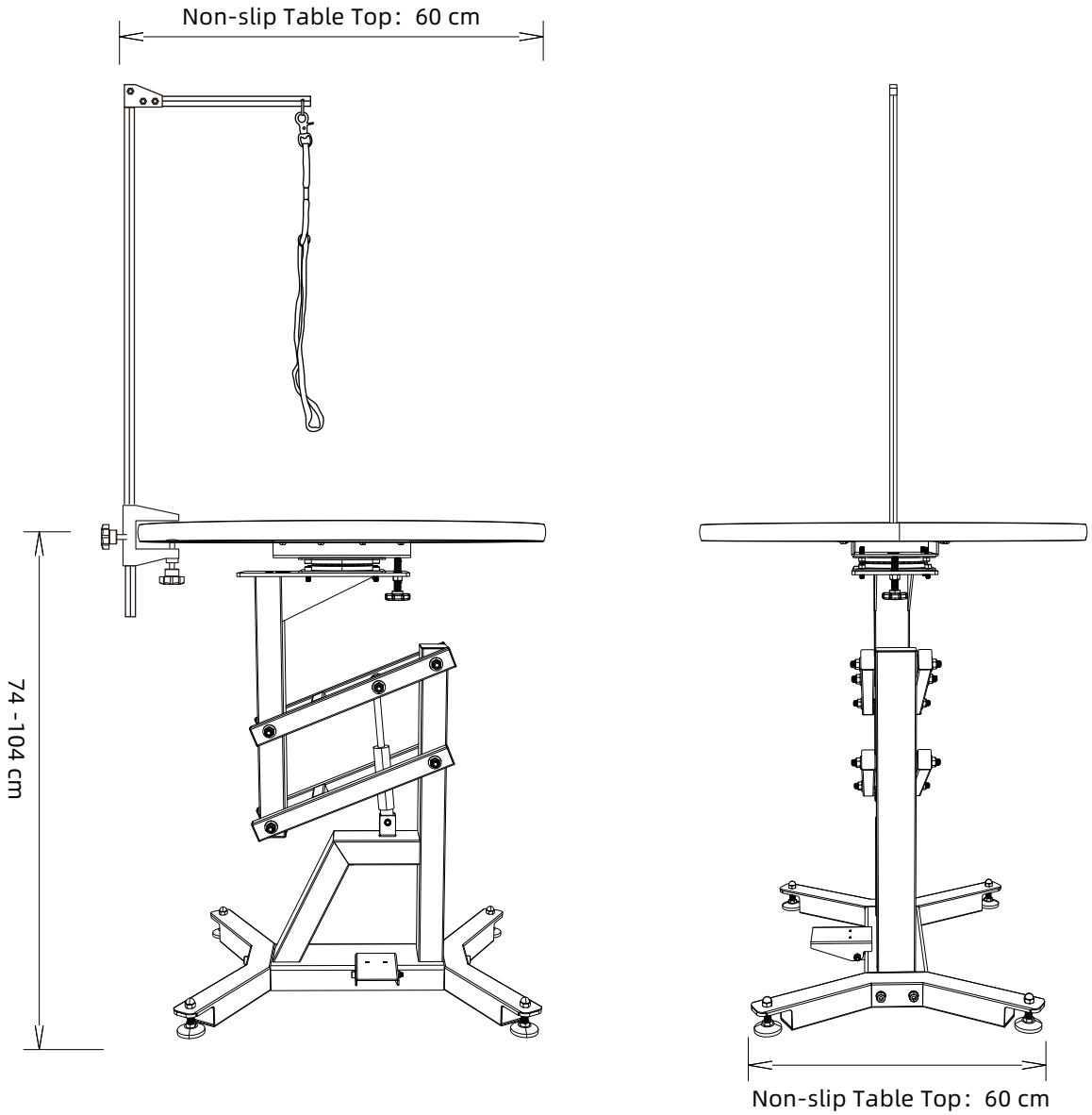

Front view **Side view**

Type: FT-831			
Net weight(kg)	19	Grass weight(kg)	21
CBM		0.127	
Product dimensions (cm)	60×60×74-104	Package dimensions (cm)	64×30×66H

Instructions for use

Adjust the leveler as below:

Rotate the leveler to a suitable height

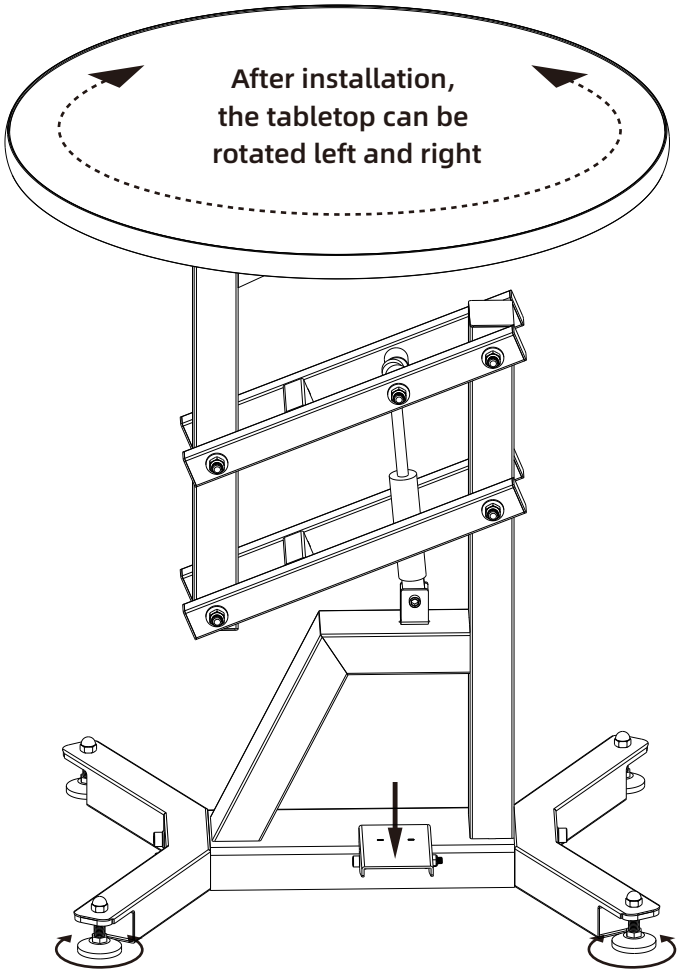

Grooming table Height Adjustment Instructions:

Press down on the foot pedal while holding the table top to control the height adjustment of the grooming table

Note: when you press down on the foot pedal, be sure to hold the table surface to prevent air pressure.

⚠ Note

1. This product is not intended for use by individuals (including children) with physical disabilities, delayed reactions, or mental disorders, unless there is the guardian shall supervise and guide the use of this product from the sidelines, and shall be responsible for the safety of the user;
2. Please do not let children get close to the lifting range of this product to prevent accidents.
3. Please do not disassemble it yourself if there are any abnormalities or malfunctions during use.
4. Do not contaminate with corrosive liquids or solids.
5. If you need to clean the frame , you can use a dry towel and a hair dryer to remove any remaining hair on the surface,excrement, water stains, and other dirt.